EVAPORATIVE CONDENSER | FLUID COOLER
GALVANIZED STEEL

INSTALLATION MANUAL

Operation | Installation | Maintenance | Transportation

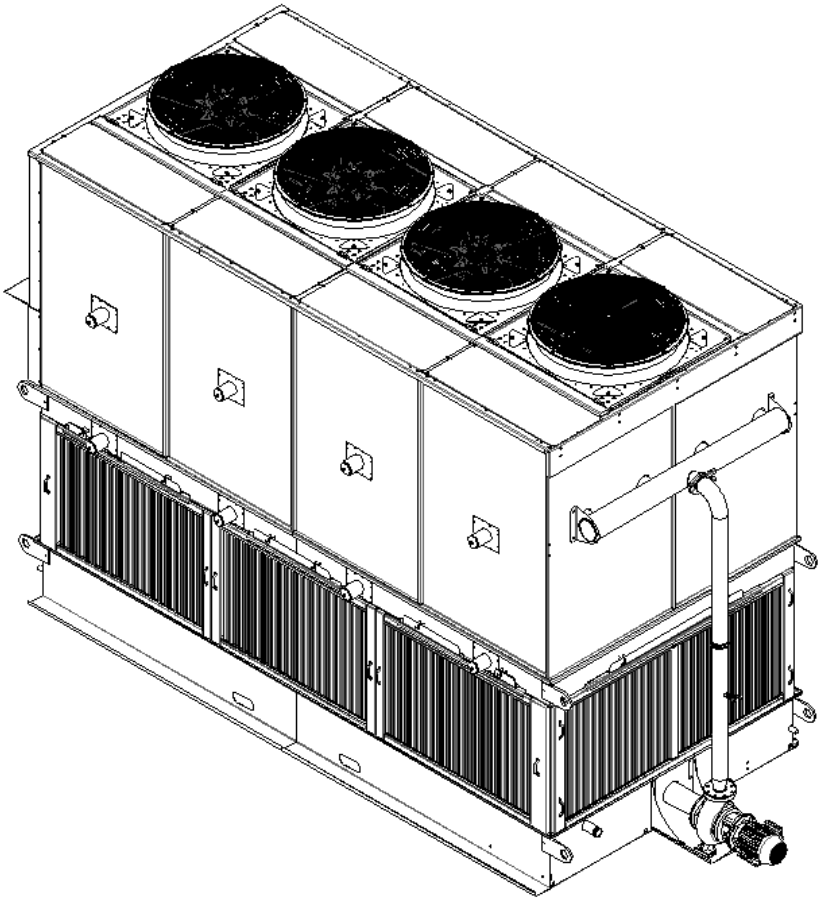

Product line:	Evaporative condenser	
Type:	GTECH CE	GTECH TF
Refrigerant:	NH_3 , HFC	Water, Glycol

guntner.com/br

SUMMARY

1 RESPONSIBILITIES 6
1.1 MANUFACTURER'S RESPONSIBILITIES 6
1.2 USER RESPONSIBILITIES 6
1.3 WARRANTY CONDITIONS 7
2 SAFETY 8
2.1 SAFETY INSTRUCTIONS 8
2.2 CONVENTION FOR SAFETY SIGNS 8
2.2.1 SAFETY NOTES AND THEIR MEANINGS 8
2.2.2 WARNING SIGNS AND THEIR MEANINGS 8
2.2.3 PROHIBITION SIGNS AND THEIR MEANINGS 9
2.2.4 MANDATORY SIGNS AND THEIR MEANINGS 9
2.3 SAFETY HANDLING FLUIDS 10
2.3.1 GENERAL GUIDELINES 10
2.3.2 HOW TO RESPOND IN AN EMERGENCY INVOLVING HALOGENATED 10
2.3.3 WHAT TO DO IN CASE OF AN EMERGENCY INVOLVING NH3 11
2.3.4 WHAT TO DO IN CASE OF AN EMERGENCY INVOLVING GLYCOL 12
2.4 PROPER FLUID HANDLING 12
2.4.1 INAPPROPRIATE USE OF NH3 14
2.5 MECHANICAL HAZARDS 14
2.5.1 FINS, EDGES, AND CORNERS 14
2.5.2 FANS 14
2.6 THERMAL HAZARDS 15
2.6.1 BURN RISKS 15
2.6.2 RISK OF FROSTBITE 15
2.7 RESIDUAL HAZARDS FROM THE REFRIGERANT PROCESS 15
2.7.1 RESIDUAL HAZARDS OF HALOGENATED REFRIGERANTS 15
2.7.2 RESIDUAL HAZARDS OF NH(3) 16
2.7.3 RESIDUAL HAZARDS OF GLYCOL 17
2.8 DANGERS CAUSED BY VIBRATION 18
2.9 HAZARDS CAUSED BY PRESSURIZED PARTS 18
2.10 HAZARDS CAUSED BY FAULTY INSTALLATION 18
2.11 HAZARDS CAUSED BY INTERRUPTION OF OPERATION 20
2.12 HAZARDS CAUSED BY OBJECTS OR FLUIDS 20
2.13 HAZARDS WHEN DISPOSING OF REFRIGERANTS 20
2.13.1 HAZARDS IN THE DISPOSAL OF HALOGENATED SUBSTANCES 21

2.13.2 HAZARDS IN THE DISPOSAL OF NH(3) ... 21
2.13.3 HAZARDS IN GLYCOL DISPOSAL ... 21
2.14 FIRST AID TREATMENT ... 21
2.15 INTENDED PROPER USE ... 22
2.15.1 OPERATING CONDITIONS ... 22
2.15.2 IMPROPER USE ... 22
3 COMPONENTS ... 24
3.1 AC TECHNOLOGY ... 24
3.2 WEG IEC (AC) FANS ... 25
3.3 EC (ELECTRONICALLY COMMUTATED) FANS ... 25
3.4 GMM (GÜNTNER MOTOR MANAGEMENT) ... 25
3.4.1 SYSTEM WITH EC+GMM FANS ... 26
3.4.2 MODBUS TCP/IP COMMUNICATION ... 28
3.5 WATER PUMPS ... 28
3.5.1 GENERAL PUMP INFORMATION ... 28
4 LOGISTICS AND HANDLING ... 29
4.1 SAFETY ... 29
4.2 TRANSPORT ... 29
4.3 STORAGE ... 30
4.4 PACKAGING ... 30
4.5 HANDLING ... 31
5 REFRIGERATION PIPING ... 33
5.1 COMPRESSOR DISCHARGE LINE ... 33
5.2 LIQUID LINE – SINGLE COIL ... 33
5.3 CONDENSED LIQUID LINES – PARALLEL CONDENSERS ... 35
5.4 LIQUID TANKS AND EQUALIZERS ... 40
5.5 THERMOSIPHON OIL COOLING ... 40
5.6 ADDITIONAL SUBCOOLING ... 41
5.7 REFRIGERATION SIDE PURGE ... 41
5.8 GENERAL OBSERVATIONS ... 42
6 INSTALLATION BASE ... 43
6.1 EQUIPMENT LAYOUT AND INSTALLATION BASE ... 43
6.2 SUPPORT STRUCTURE ... 45
7 INSTALLATION ... 46
7.1 MODULE ASSEMBLY ... 46
7.2 ASSEMBLY OF THE LOUVERS ... 47
7.3 PUMP AND RECIRCULATION ASSEMBLY ... 48
7.4 FAN GUARD INSTALLATION ... 49

7.5 INSTALLATION PROTECTION MEASURES (NR-12) ... 51
7.5.1 EMERGENCY BUTTON ... 51
7.5.2 GUARDRAIL AND LADDER ASSEMBLY ... 51
7.6 CONNECTING THE WATER PIPE TO THE TRAY ... 54
7.7 MOTOR OPENING ... 54
7.8 INSTALLING THE UNIT IN THE SYSTEM ... 55
7.8.1 INSTALLATION OF INLET AND OUTLET MANIFOLDS ... 56
7.8.2 IMPORTANT CONSIDERATIONS FOR THE INSTALLER OF THE UNIT ... 56
7.9 GROUNDING ... 57
7.9.1 GROUNDING AND POWER CABLE SIZING ... 57
7.10 ELECTRICAL INSTALLATION ... 57
7.11 PERFORMANCE ACCEPTANCE TEST ... 58
7.12 OPERATIONAL READINESS TEST ... 59
8 COMMISSIONING ... 60
8.1 INITIAL PRECAUTIONS ... 60
8.2 SYSTEM LEAK TEST ... 61
8.2.1 PREPARATION ... 61
8.2.2 PRESSURIZATION ... 62
8.3 VACUUM AND DEHYDRATION PROCEDURE ... 62
8.3.1 PREPARATION ... 62
8.3.2 VACUUM ... 63
8.4 PRIMARY AMMONIA CHARGE ... 63
8.4.1 AMMONIA CHARGING ... 63
8.5 SYSTEM PROTECTION DEVICE TESTS ... 65
8.5.1 HIGH DISCHARGE PRESSURE ... 65
8.5.2 LOW SUCTION DIFFERENTIAL PRESSURE ... 65
8.5.3 LOW OIL DIFFERENTIAL PRESSURE ... 65
8.5.4 HIGH DISCHARGE TEMPERATURE/HIGH OIL TEMPERATURE ... 66
8.6 OTHER PROTECTION DEVICES ... 66
8.7 EMERGENCY PROTECTION SYSTEMS ... 66
8.8 ASSISTED OPERATION ... 66
9 OPERATION ... 67
9.1 PUTTING THE UNIT INTO OPERATION FOR THE FIRST TIME ... 67
9.2 REMOVAL OF THE OPERATING UNIT ... 67
9.3 STARTUP AFTER A LONG SHUTDOWN ... 68
9.4 CHANGING THE WORKING FLUID ... 69
10 GMM CONTROLLER (IF APPLICABLE) ... 70
10.1 GMMNEXT STARTUP ... 70

10.2 GMM PARAMETERIZATION VIA USB ... 74
11 RESOURCE ... 77
12 MAINTENANCE ... 78
12.1 SAFETY IN MAINTENANCE ... 78
12.1.1 BEFORE STARTING MAINTENANCE ... 78
12.1.2 AFTER COMPLETING MAINTENANCE ... 79
12.2 MANDATORY MAINTENANCE SCHEDULE ... 79
12.2.1 CHECKS AND ADJUSTMENTS ... 79
12.2.2 MAINTENANCE AND CLEANING ... 79
12.2.3 INSTRUCTIONS ... 79
12.2.4 CONTROL AND MONITORING ... 80
12.3 MAINTENANCE PROCEDURES ... 80
12.3.1 FILTER AND TRAY ... 80
12.3.2 BASIN WATER LEVEL AND WATER VALVES ... 80
12.3.3 DRIFT ELIMINATORS ... 81
12.3.4 WATER DISTRIBUTION SYSTEM – SPRAY NOZZLES ... 81
12.4 PUMPS ... 82
12.4.1 TROUBLESHOOTING ... 82
12.5 WEG AC (IEC) FANS ... 83
12.6 EC FANS ... 84
12.7 CLEANING PROCEDURES ... 84
12.7.1 CLEANING THE COIL AND FAIRING ... 84
12.7.2 CLEANING THE DRIFT ELIMINATORS ... 85
12.7.3 CLEANING THE SPRAY NOZZLES ... 85
12.7.4 CLEANING THE LEVEL FLOAT VALVE ... 86
12.7.5 CLEANING THE FANS ... 86
12.7.6 CLEANING THE WATER PUMP ... 86
13 PURGE AND CHEMICAL TREATMENT OF WATER ... 87
13.1 PURGING ... 87
13.2 GALVANIZED SURFACE PASSIVATION AND WATER QUALITY ... 88
13.3 AUTOMATIC PURGE ... 88
13.3.1 AUTOMATIC PURGE ACTIVATION ... 89
13.4 CHEMICAL WATER TREATMENT ... 89
WARRANTY ... 91
AFTER-SALES SERVICE CONTACT ... 92

1 RESPONSIBILITIES

This manual has been developed as a technical reference guide for installation procedures, offering essential guidelines and best practices for qualified professionals. It does not include all detailed information on possible construction variations, nor does it address every scenario related to assembly, operation, or maintenance. The document contains the necessary information for trained personnel to perform service tasks. The images provided are intended for illustrative purposes only.

If you encounter situations not covered in this manual or have specific questions regarding installation, please contact technical support through the official service channels.

1.1 Manufacturer's responsibilities

The manufacturer is responsible for ensuring that the equipment is designed and built in accordance with the highest technical and safety standards. This includes:

- Providing complete and accurate documentation, such as technical manuals and installation guides;
- Offering adequate technical support, including consulting services and technical assistance, as needed;
- Ensuring that all components are tested for performance and safety prior to shipment;
- Ensuring the availability of spare parts for maintenance and repairs during the specified warranty period;

  *Delivery times for items must be evaluated and do not guarantee immediate availability of parts. Therefore, it is recommended that the user maintain a stock of pumps and fans.
- The considerations provided in this manual are specific to this equipment and do not apply to other series or manufacturers.
- The components used in this equipment, such as welded joints, piping, safety devices, and automated electronic systems, are designed to withstand expected mechanical, thermal, and chemical stresses, as well as the working fluids or components of a refrigeration system specified in the design data.

1.2 User Responsibilities

The end user is responsible for:

- Strictly following the instructions and guidelines provided in the technical manual for the installation, operation, and maintenance of the equipment.
- Ensuring that all personnel involved in the installation, operation, or maintenance of the equipment are properly qualified and trained.
- If training in the operation, maintenance, and care of the equipment is required, requesting personalized guidance from the Güntner team.
- Performing preventive maintenance and regular inspections as recommended in the technical manual to ensure the safe and efficient operation of the equipment.
- Immediately notifying the manufacturer in case of any failure or technical problem observed to avoid further damage or system failure.
- Ensuring that users who are not properly trained do not operate the equipment.
- Ensuring that, during operation, monitoring, and maintenance of the system, the working fluids are not changed from those specified in the design documents related to the order, except with

authorization from Güntner do Brazil.

- Installing accident mitigation measures, pressure relief systems, and operation control devices to mitigate operational disruptions.

1.3 Warranty conditions

- The warranty covers manufacturing defects and operational failures only when the equipment is used under normal conditions of use or design, within the specified period after purchase.
- The warranty does not cover damage resulting from improper installation, misuse, unauthorized modifications, or negligence;
- The user must keep detailed maintenance records and all communications with technical support as proof of compliance with operating and maintenance guidelines;
- Warranty claims must be accompanied by detailed documentation of the problems and measures taken to date;
- Güntner is not responsible for failure to comply with this manual.

Güntner Brazil provides Technical Support for inquiries and questions. Any anomaly or failure detected in this product must be reported immediately by email to assistance.br@guntner.com or by phone at +55 (54) 3220 8165.

During the warranty period, if the defects found are manufacturing defects, Güntner will replace the part at no cost to the customer. However, if the product is not defective or has been used improperly, the service costs will be passed on to the customer.

For more information, please refer to the Warranty Terms.

2 SAFETY

2.1 Safety instructions

⚠ CAUTION

- Wear appropriate personal protective equipment (PPE) when handling the equipment, especially during maintenance and cleaning operations.
- Turn off all power supplies before performing any type of maintenance or repair;
- Keep all areas around the equipment free of obstacles to ensure proper circulation and prevent accidents;
- Always keep the instructions close to the equipment;
- Ensure that the instructions are accessible to all persons working with the equipment at all times;
- Ensure that the instructions are read and understood by all persons working with the equipment.

2.2 Convention for safety signs

2.2.1 Safety notes and their meanings

⚠ DANGER

A hazardous situation that will **certainly** cause serious injury or death if not avoided.

⚠ WARNING

A hazardous situation which, if not avoided, could result in serious injury or death.

⚠ CAUTION

A hazardous situation which, if not avoided, may result in minor or moderate injury.

WARNING

Dangerous situation that could cause property damage if not avoided.

2.2.2 Warning signs and their meanings

Warning against hand injuries!
Failure to comply with warnings may result in crushed, dragged, or otherwise injured hands or fingers.

Warning of hot surface!
The temperature is above +45°C (protein coagulation) and may cause burns.

Cold surface warning!
The temperature is below 0°C and may cause frostbite and injuries.

Warning against electrical voltages!
Danger of electric shock or discharge on energized parts.

Warning against potentially explosive substances!
Use of ignition sources may cause explosions at the indicated location.

Warning against potentially flammable substances!
Use of ignition sources may cause fires at the indicated location.

Warning against corrosive substances!
Contact with corrosive substances can cause injuries, especially to the eyes.

Warning against substances that are harmful to health or irritating!
Contact with substances that are harmful to health or irritants when inhaled can cause injury or damage to health.

2.2.3 Prohibition signs and their meanings

Do not use sources of ignition or spread flames!
Sources of ignition must be kept away and must not be generated.

No smoking!
Smoking is prohibited.

2.2.4 Mandatory signs and their meanings

Wear protective eyewear!
Eye protection must be worn: safety glasses or a face shield.

Wear hand protection!
Protective gloves must be worn against mechanical and chemical hazards.

Wear respiratory protection!
Breathing apparatus must be suitable for the working fluid used and must consist of:
• At least two independent breathing devices (self-contained breathing apparatus);
• For ammonia: an additional breathing apparatus with a filter (full face mask) or an independent (self-contained) breathing apparatus, also known as a "piggyback."

Wear protective clothing!
Individual protective clothing must be suitable for the working fluid used and for low or high temperatures and have good heat insulation properties.

Activate before work!
Deactivate the electrical system and activate the protection system against new connections before carrying out maintenance and repair work.

2.3 Safety handling fluids

2.3.1 General guidelines

⚠ WARNING

Although halogenated refrigerants are classified as safe, they can be harmful if inhaled, so certain precautions must be observed when handling them.

When released into the atmosphere in liquid form, they evaporate quickly, freezing anything they come into contact with. Refrigerants must be used and recovered responsibly.

- Failure to comply with this warning may result in personal injury or death.

⚠ DANGER

Specific precautions must be observed when using ammonia (NH_3) as a refrigerant:

Ammonia is considered a high health hazard because it is corrosive to the skin, eyes, and lungs. Exposure to 300 parts per million (ppm) is fatal, and it is flammable in concentrations of approximately 15% to 28% by volume in air. When mixed with lubricating oils, its flammable concentration range is increased. It can explode if released in an enclosed space with an ignition source present, or if a container containing ammonia is exposed to fire.

- Personal protective equipment (PPE) must be worn at all times when working with ammonia.
- Failure to comply with this warning may result in personal injury or death.

2.3.2 How to respond in an emergency involving halogenated

⚠ ATTENTION

In case of unexpected refrigerant leakage, take the necessary emergency measures.

For example, if refrigerant is leaking or there is a sudden leak (leakage and evaporation of most of

the refrigerant volume in a short period of time, e.g., in less than 5 minutes);

If the refrigerant detector (limit value according to local regulations) is activated,

experienced and trained professionals wearing prescribed protective clothing must be called in to carry out

all necessary protective measures.

- Use respiratory protection;
- Use an air-independent breathing apparatus maintained in a location with a high concentration of refrigerant;

- Divert leaked refrigerant vapor and safely remove refrigerant liquid;
- Ensure that no refrigerant enters water or sewage systems.

2.3.3 What to do in case of an emergency involving NH_3

WARNING

If ammonia is transported with oil residues or other refrigerants, it may combust. An explosion can cause serious injury.

Ammonia is an irritating, corrosive, and toxic gas. An ammonia concentration of 0.2 vol.% in ambient air or prolonged exposure to air containing even lower concentrations can lead to death.

Liquid ammonia can cause frostbite or corrosive injuries to the skin and eyes.

In case of unexpected refrigerant leaks, leave the area immediately and activate the emergency stop switch. Indications of leakage are:

- Visible escape of ammonia or vapor from the heat exchanger or piping components;
- Sudden release and evaporation of most of the refrigerant volume in a short period of time, for example, in less than 5 minutes;
- Sudden strong, very irritating odor;
- Immediate irritation of the eyes, nose, and airways;
- Activation of the alarm device ($_{NH_3}$> 200 ppm).

Use respiratory protection.

Use an air-independent breathing apparatus maintained in a location with a high concentration of refrigerant.

Divert escaped refrigerant vapor and safely remove the refrigerant liquid.

Ensure that the area is ventilated.

Instructions in case of injury:

- **Call an emergency doctor immediately!**
- The injured person should keep the breathing apparatus on until receiving medical advice to avoid inhaling vapors from clothing contaminated with ammonia.
- Bathe the injured person for five to fifteen minutes with water, carefully removing clothing during the bath. **If clothing contaminated with ammonia is removed without first wetting it with water, the injury may worsen, as frozen skin may be torn off along with it.** The shower should be with room temperature water as much as possible to avoid temperature shock. If available, use

an emergency shower; otherwise, use a water hose.

2.3.4 What to do in case of an emergency involving glycol

⚠ CAUTION

Risk of injury and property damage!

Ethylene glycol is a colorless, slightly viscous, not very fluid, water-miscible, deliquescent liquid with a sweet smell or taste.

Ethylene glycol is flammable and explosive at higher temperatures in its gaseous state. In contact with the skin, it causes slight irritation with the danger of skin absorption. In contact with the eyes, it causes irritation of the mucous membrane. If swallowed, it causes disruption of the central nervous system.

The effects of prolonged contact are: fatigue, loss of limb movement, unconsciousness, kidney damage.

Keep ethylene glycol away from sources of ignition.

Do not smoke!

Ethylene glycol vapors are denser than air and can flow into lower-level environments. In stagnant air, there may be an increase in concentration at ground level. At high concentrations, there is a danger of suffocation due to reduced oxygen concentration.

Avoid contact with skin, floor, and clothing! Immediately remove contaminated and soaked clothing! Use strong oxidizing agents (chromosulfuric acid, potassium permanganate, fuming sulfuric acid, or similar).

Danger of strong reactions!

Unauthorized persons must not have access to the unit.

In case of unexpected refrigerant leaks, leave the room immediately and activate the emergency stop switch. Indications of leakage are:

- Visible escape of glycol or vapor from the heat exchanger or piping components;
- Sudden release and evaporation of most of the refrigerant volume in a short period of time, e.g., in less than 5 minutes.
- Safety procedure:
- Have a trained and experienced team with the appropriate safety equipment;
- Divert the leaked refrigerant vapor and safely remove the refrigerant liquid;
- Ensure that the area is well ventilated.

2.4 Proper fluid handling

The purpose of these instructions, as part of the operating instructions manual, is to minimize the danger to people, property, and the environment from the unit. These dangers are essentially related to the physical and chemical properties of the working fluid and to the pressures and temperatures that occur in the working fluid transport components of the unit.

⚠ WARNING

Risk of injury and material damage!

The unit may only be used as intended in the design, as specified in the documents and technical

data sheet. The operator must ensure that, when operating, monitoring, and maintaining the unit, the fluid used and the mode of operation do not deviate from the design specifications.

The operator must ensure that maintenance measures are carried out in accordance with the instruction manual. The use of a fluid other than that specified for each unit is only permitted after written approval from the manufacturer. You will find the appropriate use related to the order, as intended, in the specific order documents.

Do not exceed the maximum working pressure indicated on the equipment nameplate!

⚠ WARNING

The units must not be used when there is a possibility of a large release or sudden evaporation of most of the entire volume of the working fluid in a short period of time.

The unit must not be modified without the prior written consent of Güntner do Brazil, for example:

- Change in the operating point;
- Changing the fan capacity (air volume);
- Changing the working fluid flow volume;
- Change in working fluid.

The unit must not be operated if the safety devices recommended by the manufacturer are not available, are not correctly installed, or are not fully functional.

The unit must not be operated if it is damaged or shows signs of malfunction. All damage and malfunctions must be reported to Güntner do Brazil immediately and dealt with promptly.

Work on the unit must not be carried out without the personal protective equipment specified in these work instructions.

⚠ WARNING

Risk of injury and material damage!

Working fluids and their combinations with water or other substances in the equipment components have chemical and physical effects on the surrounding materials. The unit may only be pressurized with the specified fluid.

Pressurizing the unit with another fluid may result in:

- The structural and welding materials used not being able to withstand the mechanical, thermal, and chemical stresses;
- The thickness of the materials, their tensile strength and corrosion resistance, the molding process, and the tests provided not being suitable for another fluid, and the equipment not withstanding the new pressures and stresses.
- Not remaining secure during operation and when turned off;
- Sudden leakage of working fluids, which could directly endanger people, property, and the environment.

The maximum permissible operating temperature specified in the design must not be exceeded! Exceeding the operating temperature can result in:

- The unit being exposed to unacceptably high pressure;
- Signs of material fatigue.

The specified maximum permissible operating pressure must not be exceeded! This could result in:

- The parts of the unit that carry the working fluid not being able to withstand the new mechanical, thermal, and chemical stress values;
- The unit not remaining leak-tight during operation and when switched off;

2.4.1 Inappropriate use of NH_3

⚠ WARNING

Equipment with NH_3 must not be used when:

- There is a possibility of a large release or sudden evaporation of most of the entire volume of the working fluid in a short period of time (e.g., in less than 5 minutes);
- The installation site is not a special machine room and there is a possibility that people present may be exposed to a large release of NH3 for more than 10 minutes;
- The occupancy density in the cold room where the unit is installed exceeds 1 person per 10 m².

2.5 Mechanical hazards

2.5.1 Fins, edges, and corners

⚠ CAUTION

Risk of injury to hands!

Danger of cuts to the hands caused by edges, sharp corners, and fins.

Wear protective gloves!

2.5.2 Fans

⚠ CAUTION

Danger of cutting and pulling!

There is a risk of cutting your fingers on the fan blades, risk of injury to your hands and of pulling in loose items such as hair, necklaces or clothing.

Do not operate fans without a protective grille.

Danger of crushing point.

When the fan starts automatically during maintenance work, there is a risk of trapping hands and fingers.

Switch off the unit before starting maintenance work that requires you to remove the protective grille. Protect the unit against unintentional start-up by removing the electrical fuses from the unit. Attach a warning sign to the unit!

2.6 Thermal hazards

2.6.1 Burn risks

⚠ CAUTION

Warning: hot surfaces!

When in operation, the heat exchanger and the pipes of the unit will be at temperatures above +45 °C.

Touching them may cause burns.

Wear hand protection!

2.6.2 Risk of frostbite

⚠ CAUTION

Warning against cold surfaces!

Touching them may cause injury.

Wear hand protection!

In locations where there is a risk of refrigerant freezing, if adequate protection is not provided, the unit may freeze. In units that cannot be completely drained, the risk of freezing also remains after draining.

It is essential that adequate ventilation is ensured when draining the refrigerant from the unit.

The water supply is interrupted at sub-zero temperatures.

2.7 Residual hazards from the refrigerant process

2.7.1 Residual hazards of halogenated refrigerants

⚠ WARNING

Danger of health and environmental damage!

At high concentrations of refrigerants, there is a danger of cardiac arrhythmia and suffocation due to reduced oxygen concentration, especially at ground level.

- Ensure that workrooms are well ventilated to prevent inhalation of high vapor concentrations.
- Ensure that refrigerant escaping from the unit does not enter the building or other locations that could put people at risk. Halogenated refrigerant vapor must be prevented from entering nearby rooms, stairwells, yards, passageways, or drainage systems.
- Proper disposal must be carried out;
- Monitor the concentration of refrigerant in the ambient air to ensure compliance with limit values;
- Test the unit for leaks regularly.

Danger of ignition and fire!

- For work involving fire or sparks (grinding, welding, etc.), ensure that appropriate firefighting equipment is on site.
- Be aware of the danger of ignition of oil residues unintentionally carried by the

halogenated refrigerant;

- Ensure that the firefighting equipment provided is in sufficient quantities, that it works properly, and that the extinguishing agent does not react with the halogenated refrigerant;
- Smoking during work is prohibited!

Risk of frostbite

- Splashes of overheated halogenated refrigerant can cause frostbite to the eyes and skin;
- When removing residues after halogenated refrigerant spills, you must be aware of any remaining halogenated refrigerant.

Danger of poisoning!

- Contact between halogenated refrigerant and fire can form toxic products;
- Avoid contact of halogenated refrigerant with open flames;
- Welding should only be carried out after the refrigerant has been completely drained from the system. Ensure good ventilation!
- In case of emergency work in high concentrations of refrigerant in the air, use a breathing apparatus independent of the ambient air.

2.7.2 Residual hazards of $NH_{(3)}$

⚠ WARNING

Danger to health and materials!

Explosion and fire hazard! Ammonia is a flammable and explosive gas.

The risk of fire and explosion is low due to the high ignition temperature, low explosive potential, and high affinity for air moisture. However, leaks in the unit can cause NH3 refrigerant to escape into work areas. Direct and indirect ignition sources can cause NH3 refrigerant to burn and explode.

- Do not store potentially explosive and flammable substances in the workplace!
- Test the unit for leaks regularly.

Risk of chemical burns!

Leaks in the unit can cause refrigerant to escape into the work area. NH_3refrigerant is corrosive in combination with moisture. Contact with skin, mucous membranes, and eyes causes chemical burns. If the refrigerant gets into the eyes, they can no longer be kept open and the person may become disoriented.

- Test the unit for leaks regularly.

Danger of poisoning!

Leaks in the unit can cause refrigerant to escape into adjacent areas. Ammonia is a toxic irritant gas; if inhaled, it causes agitation, dizziness, vomiting, and cramps, with suffocation at high concentrations and life-threatening pulmonary edema.

- Test the unit for leaks regularly.
- Ensure that the maximum permissible limit values in the workroom are not exceeded;
- Monitor the concentration of ammonia in the ambient air with detectors and alarm devices.

Risk of frostbite!
Liquid NH_3refrigerant has a temperature of -33 °C. Contact with skin and eyes with liquid refrigerant causes frostbite.

- Test the unit for leaks regularly.

⚠ CAUTION

Danger of injury, damage to property, or environmental damage from combinations of ammonia and water! If water comes into contact with liquid ammonia, this can result in an intense release of gas and liquid ammonia.

- Never spray water onto liquid ammonia!
- Do not use water in the engine room to switch on ammonia gas!
- Ensure that the ammonia solution does not enter the water or sewage systems.

2.7.3 Residual hazards of glycol

⚠ CAUTION

Health hazard!

- Skin contact with glycol causes slight irritation with the risk of absorption; contact with the eyes causes irritation of the mucous membrane; if swallowed, it causes disruption of the central nervous system; with prolonged effects of fatigue, loss of limb movement, unconsciousness, and kidney damage.
- Avoid contact with skin, eyes, and clothing! Immediately remove contaminated and soaked clothing!
- Ethylene glycol vapors are heavier than air and can flow into lower-level environments, increasing the concentration at ground level. At high concentrations, there is a danger of suffocation due to reduced oxygen concentration.
- To avoid inhaling high concentrations of vapor, workrooms must be well ventilated.
- Test the unit for leaks regularly!

Danger of ignition and fire!

- Ethylene glycol is flammable and explosive at higher temperatures in a vapor/gaseous state.
- Keep ethylene glycol away from sources of ignition.
- Suitable fire-fighting equipment must be provided on site. Ensure that the equipment is provided in sufficient quantities, that it functions correctly, and that the extinguishing agent does not react with the glycol;
- No smoking!

Danger of poisoning!

Contact of glycol with open flames must be avoided, as toxic combustion products may form. Welding processes should only be carried out after the fluid has been completely drained from the system. Ensure good ventilation!

Do not come into contact with strong oxidizing agents (sulfuric acid, potassium permanganate, fuming sulfuric acid, etc.)! Danger of strong reactions!

2.8 Dangers caused by vibration

Excessive vibrations occur mainly due to imbalance in the motor and propeller assembly. This imbalance can be caused by excessive dirt or physical damage to the propeller geometry.

Excessive vibrations are transferred to the unit and thus cause damage to the unit assembly or other components of the refrigeration system. Therefore, regularly check for contamination on the fan blades and the integrity of the welded and bolted joints. Make sure that the fans are always operating within the operating range indicated in the technical data sheet.

⚠ CAUTION

Risk of injury and material damage caused by flying objects and components.

If the fans are damaged during operation, parts of the blades may injure people or cause damage to property near the fan.

The fans, components, and cables of the system must be designed, constructed, and integrated in such a way that the hazards caused by vibrations generated by them or other parts of the system are reduced to a minimum.

2.9 Hazards caused by pressurized parts

⚠ WARNING

Breaks in pressurized pipes or pressurized components of the unit can cause injury or property damage due to the leakage of materials. A sudden large release of working fluid after a rupture or leak in pressurized components of the unit can cause the following risks:

- Decrease in oxygen concentration in the air;
- Flammability caused by the proportion of lubricating oil for refrigeration compressors present;
- Freezing (caused by splashing liquid refrigerant);
- Suffocation;
- Panic;
- Environmental pollution.

Ensure that the unit in question is pressure-free before starting maintenance work and remove the working fluid.

Perform maintenance work, especially welding, on the unit only after completely removing the working fluid from the unit.

2.10 Hazards caused by faulty installation

⚠ CAUTION

Injuries and material damage can be caused by faulty installation!

Improper installation can result in:

- Breakage or leakage of components and pipes in the fluid transport unit;
- Defects or absence of refrigerant control devices; the liquid may heat up when the refrigeration system is shut down and cause pipes or connection flanges to rupture when it expands;
- Irregular distribution of the load on the equipment, with the risk of stress within the unit or

displacement, causing a risk of rupture;

- Insufficient resistance of working fluid transport lines against mechanical damage! Installing distribution pipes and heads in such a way that they are under tension results in the risk of ruptures or fluid leaks from the unit and pipes;
- Breakage of components causing working fluid to leak onto exposed electrical cables;
- Functional failures of the unit caused by air inlet/outlet obstructions;
- Obstruction of inspection and maintenance points, without accessibility to components, connections, and electrical cables, fluid transport piping, without recognizable identifiers on the pipes, and insufficient space for testing.

It must be ensured that:

- Units are installed at the corresponding points and secured with screws. The operator or installer is responsible for ensuring that connections have adequate strength;
- The diameters of the mounting holes have been determined by the manufacturer and the fastening screws are adapted accordingly;
- The screws are secured against loosening by means of an appropriate locking device;
- The screws are not overtightened;
- All screws are tightened equally to achieve the most balanced load distribution possible on the connections;
- All fastening points must maintain the same spacing so that no mechanical stresses occur in the unit structure. The units are anchored in their fastening position to prevent the equipment from moving;
- The security of the screws must be tested as part of maintenance;
- The unit must be fixed and configured so that it is not damaged by sources of conditional risk to the environment (production, transport, and other processes at the installation site) or disturbed by unauthorized persons;
- The units must be fixed and configured so that the air inlet/outlet is unobstructed;
- The units must be secured so that they can be inspected and checked from all sides. In other words, there must be unobstructed access to the refrigerant transport components, electrical system, connections, and lines, the pipe labeling must be identifiable, and adequate space must be available for testing;
- Working fluid transport lines must be protected against mechanical damage;
- When installing, keep the unit free of load;
- No force may be exerted on the distribution and manifold pipes.

⚠ CAUTION

The following must be observed when installing the unit:

- Objects must be kept away from areas that could be affected by the refrigerant;
- Ensure that protective objects are in a safe location against a refrigerant concentration higher than that permitted by local restrictions;
- Easily flammable materials must not be placed below or near the unit;
- In areas used for internal plant traffic, pipes to/from the unit must only be installed with connections that cannot be removed.
- Release devices must be provided to prevent liquid leaks;
- Subcooled liquid may only be present in the smallest possible quantity in sections of the system when it is switched off.

2.11 Hazards caused by interruption of operation

⚠ WARNING

Ensure that:

- The installation has no faults;
- The maximum permissible operating pressure is always observed;
- The pressurized line sections are depressurized before any maintenance and repair work;
- Vibrations from the refrigeration system (caused by compressors or others components) and the fan are minimized by all means;
- Release devices to prevent liquid leaks are provided and must be installed.

2.12 Hazards caused by objects or fluids

⚠ CAUTION

Injuries and material damage can be caused by fluid leakage and objects from the equipment!

2.13 Hazards when disposing of refrigerants

⚠ WARNING

The following notes are recommendations for the proper disposal of refrigerant fluid from the unit. The applicable waste disposal laws are specific to the country of operation, but in general:

- Disposal should only be carried out by specialists;
- All components of the unit, such as working fluids, oil, fans, etc., must be disposed of correctly;
- Working fluid that is not suitable for reuse must be treated as waste and disposed of safely;
- Halogenated refrigerant must be placed in a special container in accordance with the relevant safety measures. It must be identified and labeled, for example, "Recovered HFC R-404A";
- A single-use disposable container must not be reused, as refrigerant vapor residues in the container escape during disposal;
- The working fluid container must not be overfilled. The maximum permissible pressure of the working fluid container must not be exceeded during the working process;
- The working fluid must not be filled into a liquid container that contains another or an unknown working fluid. This other working fluid must not be released into the atmosphere, but must be identified, reprocessed, or disposed of correctly;
- Used refrigeration oil that has been recovered from the unit and cannot be reprocessed must be kept in a separate, suitable container, treated as waste, and disposed of safely;
- You must ensure that all components containing working fluids are disposed of correctly;
- The unit is predominantly composed of copper, aluminum, galvanized steel, stainless steel, cast iron and polyamide (motors). These materials can be handled by the waste industry for recycling.
- Before disposal, the components of the working fluid must be drained so that the pressure is reduced to at least 0.6 bar absolute, considering a unit pipe volume of up to 0.2 m³, and to 0.3 bar absolute for a unit pipe volume greater than 0.2 m³. The pressure reduction process is then complete when the pressure no longer increases and remains constant.

2.13.1 Hazards in the disposal of halogenated substances

⚠ ATTENTION

The refrigerant recovery or disposal facility must be operated in such a way that the risk of refrigerant or oil being released into the environment is as low as possible.

Ensure that no working fluids enter the water or sewage systems.

2.13.2 Hazards in the disposal of $NH_{(3)}$

⚠ WARNING

Danger of environmental pollution!

Ammonia (NH_3) is classified in the Catalogue of Substances Hazardous to Waters as water hazard class 2.

Ammonia that escapes through a leak can enter the environment through air circulation, as it is lighter than air and rises quickly. It is diluted with air to harmless concentrations. But even if the concentration is harmless, the smell of ammonia is still irritating. The classification of ammonia as "toxic" means that people in the area may panic.

- Ensure that no working fluid enters the water or sewage systems.
- In the event of a serious ammonia leak into the wastewater system: immediately report the incident to the local water system personnel;
- The recovery or disposal facility for working fluids must be operated in such a way that the risk of emission into the environment is as low as possible.

2.13.3 Hazards in glycol disposal

⚠ CAUTION

Danger of environmental pollution!

Ensure that no fluid enters the water or sewage systems.

The refrigerant recovery or disposal facility must be operated in such a way that the risk of emissions into the environment is as low as possible.

2.14 First aid treatment

It is important that first responders wear appropriate respiratory protection during all interventions and remove the victim from the site to a clear and decontaminated area as close as possible, immediately requesting medical assistance and an ambulance. If the product has come into contact with the eyes, speed is vital. The eyes should be washed with eye wash solution or water for at least 10 minutes. If medical services are not available, washing should continue for another 20 minutes. If the product has come into contact with the skin, clothing that has come into contact with the product should be removed and the affected parts of the body should be washed thoroughly.

In case of inhalation of vapors, the victim should be placed directly on the ground for possible artificial respiration and/or cardiac massage. If breathing is difficult, apply oxygen with a controlled breathing apparatus. If the victim has stopped breathing, apply artificial respiration. In case of cardiac arrest, apply external cardiac massage.

In case of ingestion, provide large amounts of water to drink if the victim is still conscious. **Do not induce vomiting**. General strengthening treatment will be necessary after the critical phase of poisoning. The consequences of ammonia poisoning do not normally exceed 72 hours, but eye damage may be permanent. If exposure is severe, the patient should be kept under medical observation for at least 48 hours, as there is a possibility of delayed pulmonary edema.

2.15 Intended Proper Use

These heat exchangers are commonly installed to remove generated heat.

The unit is delivered for operation with a specific operating point of:

- Temperature and Pressure;
- Volumetric air flow;
- Liquid volumetric flow rate;
- Altitude;
- Thermal capacity.

You will find the parameters and exact model of your equipment in the project documents related to the order. If you do not have them, please request them as soon as possible from the Güntner do Brazil technical team.

NOTICE
For installations in or near coastal areas, please contact your Güntner do Brazil representative to confirm the compatibility of the combination of materials with sea air.

2.15.1 Operating conditions

The equipment is a component of a refrigeration system, including its working fluid circuit. The purpose of these operating instructions is to minimize hazards to people, property, and the environment. These hazards are primarily related to the physical and chemical properties of the working fluids and the pressures and temperatures that occur in the components that transport the working fluid in the equipment.

In order to be aware of the residual hazards of refrigerants, it is essential, according to NR 26, to be familiar with the SDS (Safety Data Sheet) or MSDS (Material Safety Data Sheet) of the compounds provided by the refrigerant manufacturers.

- The equipment must only be used in accordance with its intended use. The operator must ensure that, when operating, monitoring, and performing maintenance on the system, the working fluid does not deviate from the data specified in the design documents related to the order.
- The operator must verify that maintenance measures are being performed in accordance with the system operating instructions manual;
- Do not exceed the maximum working pressure (MWP) stated on the nameplate and specified in the design documents related to the order.

2.15.2 Improper use

Working fluids and their combinations with water and other substances in the components that transport the working fluid have chemical and physical effects on the interior of the surrounding materials. The unit should only be pressurized with the compound defined in the design documents related to the order.

Pressurizing the unit with another working fluid may result in:

WARNING	
	A possible sudden leak of working fluid that could put people and/or property and/or the environment at risk. The PMTA specified on the nameplate and in the design documentation related to the application must not be exceeded;
	Fire hazard;
	Risk of explosion;
	Risk of suffocation;
	Risk of chemical burns;
	Risks caused by panic reactions.

3 COMPONENTS

Component:	GTECH CE	GTECH TF
AC fan	Standard	Standard
EC Fan	Optional	Optional
GMM controller	Optional	Optional
Water pump	Included	Included

3.1 AC technology

Axial fans feature the highest level of technology and performance on the market, designed to offer high flow rate with low back pressure and excellent noise levels. If frequency inverters are used for speed control, the following items must be observed for motors with external rotors:

- A sine wave filter must be installed between the frequency inverter and the motor on all poles (sine wave output voltage filter effect between phase-phase, phase-ground), see Figure 1.

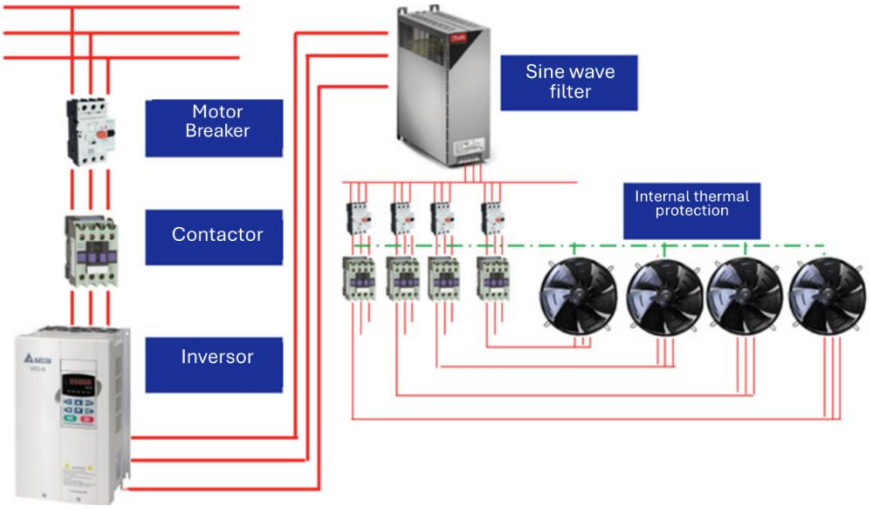

Figure 1 - Minimum assembly required for installation of inverters with multiple fans.

- Three-phase fan motors can be operated via a star/delta connection with two speeds and/or speed control. The direction of rotation must be checked. If the direction is wrong, it can be changed by swapping the two phases.

WARNING
If an AC motor with frequency inverter is used, it is important to use components to protect the equipment from overloads and short circuits. The use of motor circuit breakers is recommended, and in addition, the minimum speed of the fans should always be set to 50% (30 Hz). During longer periods of storage or downtime, the fans should be turned on for 2 to 4 hours every month. In the case of fans with IP54 protection, any sealed condenser drain outlet must be opened at least every six months. The drain should be positioned in an ideal position for water drainage. When opening and/or closing the terminal box cover, care must be taken to control the torque for tightening and sealing it. Excessive tightening will cause cracks in the terminal box cover, allowing water to enter and consequently damaging and/or burning out the fan.

Before starting any repair work on motors with a thermal switch or thermistors, make sure that the motors cannot start automatically after cooling down.

Maintenance and care must be performed in accordance with the manufacturer's manual.

3.2 WEG IEC (AC) Fans

Equipment equipped with WEG IEC fans provides high heat rejection capacity with high efficiency (W22 – Premium Efficiency). Installation shall be carried out in accordance with the manufacturer's specifications and the Electric Motor Specification Guide.

The motors used in the GTECH product line are suitable for operation with variable frequency drives (VFDs). However, due to the high-frequency voltage pulses generated by the VFD, it is the sole responsibility of the customer and the qualified installer to ensure that the electrical installation minimizes voltage peaks at the motor terminals. To prevent premature damage to the winding insulation, the maximum allowable cable length between the VFD and the motor, proper system grounding, and, when required, the use of output filters recommended by the VFD manufacturer shall be strictly observed.

WARNING
If an IEC (AC) motor with a frequency inverter is used, it is important to use components to protect the equipment from overloads and short circuits. The use of motor circuit breakers is recommended, and in addition, the minimum speed of the fans should always be set to 50% (30 Hz). During longer periods of storage or downtime, the fans should be turned on for 2 to 4 hours every month. In the case of fans with IP54 protection, any sealed condenser drain outlet must be opened at least every six months. The drain should be positioned in an ideal position for water drainage. When opening and/or closing the terminal box cover, care must be taken to control the torque for tightening and sealing it. Excessive tightening will cause cracks in the terminal box cover, allowing water to enter and consequently damaging and/or burning out the fan.

3.3 EC (electronically commutated) fans

The electronic (EC) fans used in the GTECH line have the highest level of technology and performance on the market in terms of aerodynamics and performance. They are designed to offer high performance in terms of flow and excellent noise levels, resulting in:

- Optimization of energy efficiency through continuous control of EC fans;
- Reduced energy and maintenance costs;
- Reduction in the total number of electrical parts compared to control systems using step control or frequency inverter control.

3.4 GMM (Güntner Motor Management)

GMM is an advanced management system that optimizes motor performance, ensuring efficient and reliable operation, which provides:

- The GMM system is a unique and exclusive solution that has been specially developed for Güntner heat exchangers with EC fans;
- Accessibility and ease of parameter adjustment;

- Reduction and definition of maximum noise level (adjustment for night operation);
- Safety assurance through alarm and operating message emissions;
- Guaranteed safe and reliable operation thanks to the BYPASS function;
- Full integration with the main control system through industry-standard communication protocols;
- Commissioning time significantly reduced by simple controller adjustment (no need to address the fans);
- The combination of exclusive EC fans with GMM provides a unique solution and an intelligent heat exchanger system. GMM manages and controls fan speed according to predefined pressure or temperature for process control, resulting in an energy-optimized system;
- The fans are factory programmed to operate at a minimum rotation of 10% and never shut down. This programming prevents a reduction in pressure/temperature inside the motor's electrical box, providing a longer service life;
- The plug-and-play system, in addition to providing greater reliability and quality in the installation, ensures the correct commissioning and maintenance of the fans due to automatic e l programming by the GMM, thus no software, specialist, or configuration is necessary.
- Due to the use of electronically commutated (EC) axial fans, the panel and electrical installation, together with the GMM controller, are simple and easy to install.

3.4.1 System with EC+GMM Fans

The system with EC fans and GMM (Güntner Motor Management) allows precise control of the motor speed, resulting in efficient operation and energy savings. A unique solution with an intelligent control system for energy-optimized operation, providing an excellent heat exchange solution. The main benefits of this combination are:

- Optimization of energy efficiency through continuous control of EC fans;
- Reduction of energy and maintenance costs;
- Reduction in the total number of electrical parts compared to control systems using *step control* or frequency inverter control.

Figure 2 shows the interconnection of the EC + GMM system.

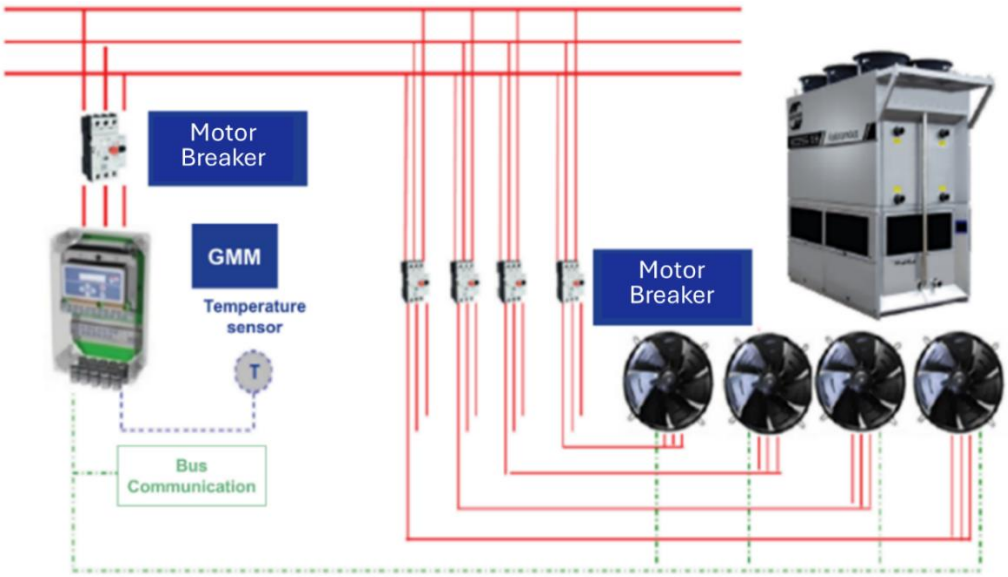

Figure 2 - Illustration of the ventilation system connected to the GMM.

For more information, please contact Güntner Brazil's Technical Department or consult the GMM (Güntner Motor Management) manual using the QR Code below:

GMM Manual (PT-BR)

If any of the GCM communication modules (available as accessories) are used, the integration of the automation system component must be performed by a duly qualified automation professional.

When in automatic mode, fan speed control will occur through readings of signals emitted by the temperature sensor and pressure transducer. Figure 3 illustrates the GMM and the temperature and pressure reading devices.

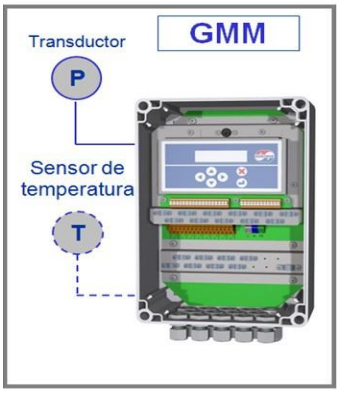

Figure 3 - Illustration of the plug and play system.

Pressure or temperature sensors are responsible for emitting signals that cause the GMM controller to adjust fan speed. The choice of sensor type should be based on the table below:

Application type	Sensor Type Transducer
Evaporative Condenser	PRESSURE transducer sensor
Gas cooler	TEMPERATURE transducer sensor
Closed-circuit cooling tower	TEMPERATURE transducer sensor

Pressure or temperature sensors must be connected during installation according to the table below:

Application type	Transducer Sensor Installation Position
Evaporative Condenser	General INPUT equipment collector (compressor discharge)
Gas cooler	General OUTLET equipment manifold
Closed-circuit cooling tower	OUTPUT equipment manifold

3.4.2 Modbus TCP/IP communication

To perform external communication via the Modbus TCP/IP interface, the GMM bus parameters are available at in the Modbus TCP/IP Interface Specification for GMM and GHM manual.

3.5 Water pumps

The centrifugal pumps used in evaporative condensers and closed cooling towers are designed to prioritize low-pressure water flow. The optimized points were developed to ensure the lowest consumption based on the required flow rate.

For more information, please consult the water pump manual or request support from Güntner do Brazil's Technical Department.

Before removing the terminal box cover and disassembling/dismantling the pump, make sure that the power supply has been turned off. The pump must be connected to an external main switch.

Whenever motorized equipment is used in potentially explosive environments, comply with the general or specific rules and regulations imposed by the responsible authorities or competent organizations.

WARNING
No electrical connections may be made without the manufacturer's consent during the warranty period. Failure to follow the procedures described in the manual may void the warranty. When cleaning the equipment, be careful not to direct the water jet at the pump, as this may cause damage to the electrical installation. The operating frequency and voltage are indicated on the rating plate. Make sure that the motor is compatible with the power supply available at the installation site. The electrical connection must be made as indicated in the connection diagram inside the terminal box cover.

3.5.1 General pump information

WARNING
The pump is not designed to pump liquids containing solid particles, debris, or dirt. Before starting the pump, it is necessary to thoroughly clean and flush the system and fill it with clean water. The warranty does not cover damage caused by flushing or any damage caused by improper operation. The pump must be completely filled with liquid when checking the direction of rotation.

WARNING
Checking the direction of rotation is crucial to ensure that the pumps operate correctly, preventing damage to the equipment. The direction of rotation must be checked the first time the machine is operated and after any maintenance.

4 LOGISTICS AND HANDLING

4.1 Safety

Safety practices during transport and storage are essential to prevent damage to the equipment.

⚠ ATTENTION

The equipment weighs between 2,000 kg and 18,000 kg; refer to your equipment's technical data sheet for details. It can slide and fall from the means of transport, causing serious injury or death. Strong impacts or vibrations can damage the unit.

- Ensure that the designated personnel are trained in proper unloading procedures.
- Use a transport device appropriate for the weight of the units. You will find the weight of your packaged unit in the design documents related to the order. Make sure no one is under the unit or near the loading area during transport;
- Ensure that the unit's weight is evenly distributed for transport;
- Observe the instructions on the shipping labels on the packaged units;
- Protect the unit against slipping and mechanical damage;
- When transporting by crane: the hooks and suspension mechanism of the load lifting equipment must only be attached at the points specified by the manufacturer;
- Use auxiliary transport equipment when necessary;
- Use a transport device appropriate for the weight of the unit;
- **Do not use connecting parts or manifolds as attachment points for hooks for suspending, pulling, securing, or mounting. This may cause leaks;**
- Transport the unit carefully. In particular, avoid moving the unit abruptly;
- Perform detailed inspections before and after transport to detect any potential damage.

⚠ CAUTION

DO NOT USE A FORKLIFT TRUCK TO MOVE THE EQUIPMENT!

ENSURE THAT THE EQUIPMENT IS MOVED BY A QUALIFIED PROFESSIONAL!

4.2 Transport

The GTECH Evaporative Condenser and open cooling tower must be transported with care to ensure the integrity of the equipment.

Read and observe all transport stickers on the units' packaging;

Prolonged mechanical stress caused by uneven road surfaces, potholes, and vibrations during transport can damage the equipment;

Transport and unload the packaged unit using appropriate transport equipment (crane, hoist, overhead crane, etc.);

The equipment may only be transported in packaging that is suitable for protection.

Check the integrity of the ShockWatch impact indicator sticker. If it is red, inform the carrier upon receipt and notify Güntner's technical team do Brasil as soon as possible!

⚠ CAUTION

CAUTION! The capacity of the means of transport must be at least 1.5 times the weight of the unit. Appropriate transport methods must be used, based on the size and weight of the equipment. Transport vehicles must be equipped with fastening mechanisms to prevent movement during transport.

4.3 Storage

WARNING

- Danger of corrosion and dirt accumulation;
- Protect the unit from dust, dirt, moisture, contamination, sea air, and other harmful effects;
- Do not store the unit longer than necessary;
- Only store units in their original packaging until installation;
- Store the unit in a protected location away from dust, dirt, moisture, and free from contamination and sea air until installation (storage location protected from the elements);
- Store the unit in a covered and protected location, free from dust, dirt, moisture, and other contaminants, avoiding exposure to adverse conditions such as excessive moisture or extreme temperatures.

4.4 Packaging

- Check the scope of delivery upon completion. For the complete scope of delivery, refer to the order-specific project documents.
- Any damage due to transport and/or missing parts must be recorded on the delivery note. The facts must be reported immediately to the manufacturer in writing;
- Check the transport pressure: Units are delivered by the manufacturer with a transport pressure of approximately 2.0 bar (clean, dry air). Check the transport pressure at the Schrader valve (pressure measurement). For units with lower pressures: inform the manufacturer immediately and note the pressure found on the delivery note. Lower pressure in the unit indicates a leak due to damage during transport. Leakage of working fluid due to a leak in the unit can lead to injury or even death (see residual hazards with refrigerants). **Do not turn on the unit!**

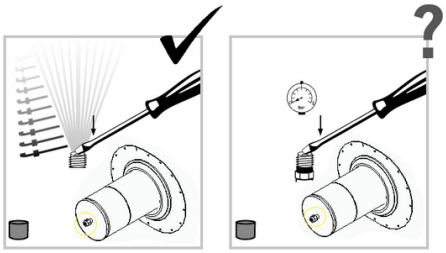

Figure 4 - Illustration of the Schrader valve positioned on the equipment connections.

WARNING

Protect the unit from dust, dirt, moisture, damage, contamination, and other harmful influences. Start installation as soon as possible!

4.5 Handling

The equipment must be moved using a means appropriate for the weight and size of the unit (crane, hoist, overhead crane, etc.).

The capacity of the means of transport must be at least 1.5 times the weight of the unit. Refer to your equipment's technical data sheet to verify the weight.

WARNING
To lift the equipment, slings compatible with the weight and length of the unit **MUST** be used. Use all attachment points. Failure to use slings may damage the structure of the equipment and will void the warranty. LIFTING SLINGS ARE NOT SUPPLIED WITH THE EQUIPMENT. It is the customer's responsibility to provide them for unloading. Do not use connection parts or manifolds as attachment points for hooks to suspend, pull, secure, or assemble. This can cause leaks! Strictly follow the assembly instructions to ensure correct installation and alignment of the modules!

For equipment with a base length of less than 4400 mm, only one lifting beam may be used. However, the angle of the straps must not exceed 60°, as illustrated in the figure below:

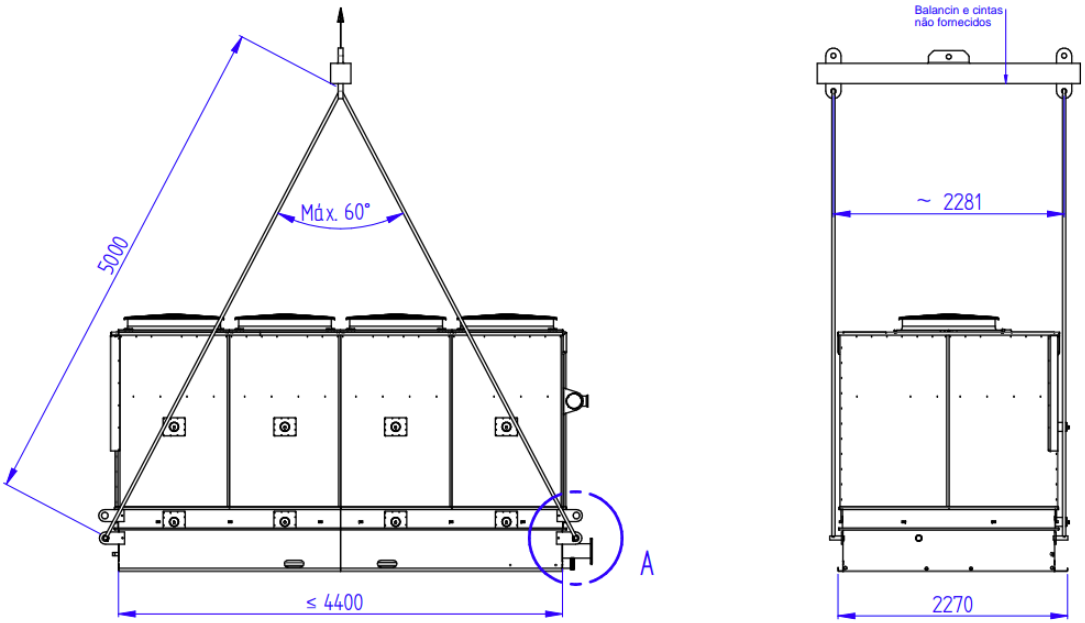

Figure 5 - Handling instructions for equipment less than 4400 mm in length.

For equipment with a length greater than 4400 mm, two or more slings must be used so that the lifting strap forms a 60° angle with the equipment, as illustrated in the figure below:

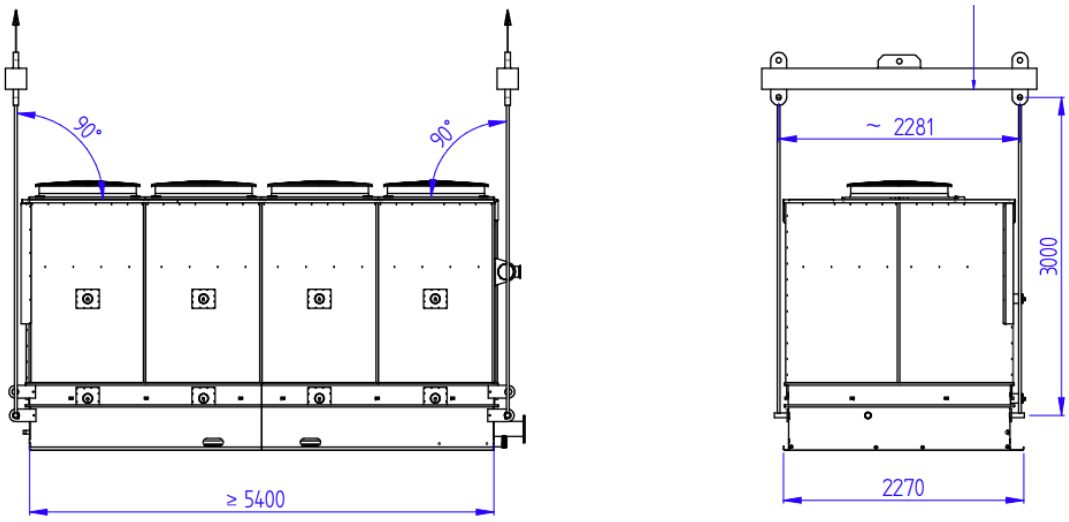

Figure 6 - Handling instructions for equipment longer than 4400 mm.

⚠ CAUTION
CAUTION! The center of mass of the equipment is shifted to the side of the collectors, which may cause the equipment to tip over during handling.

5 REFRIGERATION PIPING

WARNING
Supports or ***pipe racks*** must be used on the pipes to support the connection manifolds. The manifolds must be completely free of tension to prevent interlaminar shear. **Install appropriate supports to prevent vibrations and stresses in the piping.** The equipment is not shipped with manifolds installed; it is the customer's responsibility to install them in accordance with good engineering practices.

5.1 Compressor discharge line

The discharge line is responsible for transporting the superheated, high-pressure refrigerant from the compressors to the condenser. The gauges of the discharge pipes must be sized according to the lengths of the pipes and their peripherals. Good practices allow for a maximum pressure drop of 1.5K per 100m of pipe. Following this recommendation in most installations will result in a pressure drop between the compressor discharge and the condenser inlet. In any system, whether new or old, measurable pressure drops in the discharge line must be taken into account when sizing the evaporative condenser and compressor. Pressure sensors and high transducers must be installed in the discharge line before the condenser.

5.2 Liquid line – Single coil

The liquid line carries the condensed refrigerant from the condenser outlet to the liquid receiver. Figure 7 illustrates the piping recommendations for a single coil, showing the correct connection of the piping for a single coil connected to the system with the liquid inlet from the high-pressure receiver entering at the top. The compressor discharge line consists of a purge valve at a high point followed by a shut-off valve.

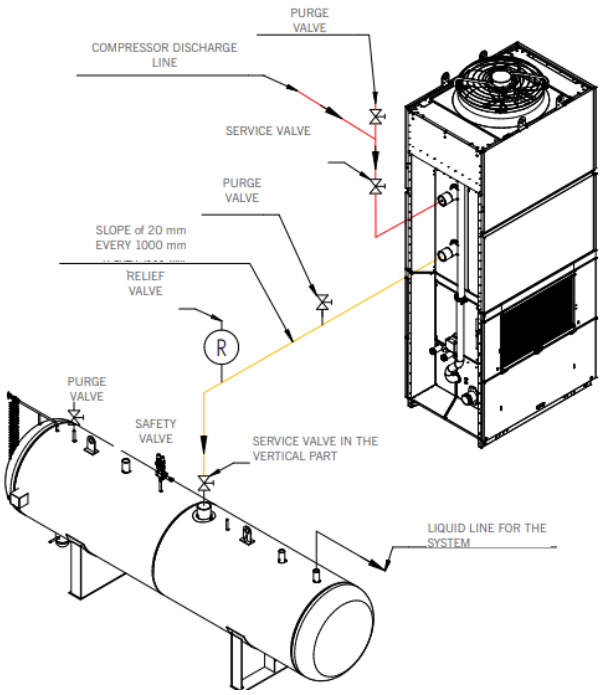

Figure 7 - Piping recommendations for a single coil.

The condenser liquid line must be properly sloped in conjunction with a relief valve, a purge valve on the horizontal piping, and a shut-off valve installed on the vertical piping.

The liquid tank should be installed with an additional purge valve and a double safety valve. The condensate line that leaves the condenser and goes to the liquid tank must be carefully installed. It is essential that the condensate line be designed to allow the liquid to flow by gravity to the liquid tank at a speed of less than 0.5 m/s.

The size of the line will depend on whether the liquid will flow directly from the condenser to the top of the liquid tank or whether it will be designed to work with a siphon entering the bottom of the liquid tank. When the connection is made at the top of the liquid reservoir, as shown in Figure 9, the condensate line must be sized to lower the speed, ensuring that the liquid drains from the line. In this way, the vapor contained in the space above the liquid will flow freely toward the evaporators.

This ensures that the pressure in the liquid tank is equalized with the outlet pressure of the coil, allowing the liquid to flow freely from the condenser to the liquid tank. The liquid line should also be sloped at least 20 mm for every 1.0 m toward the liquid tank to facilitate flow. When the condensed liquid has its flow diverted into the bottom of the liquid tank, there will be a free flow of vapor and, consequently, the pressure between the tank and the outlet manifold cannot be equalized through the liquid line. In this case, a separate line must be installed from the top of the liquid tank to the liquid piping, serving as an equalization line.

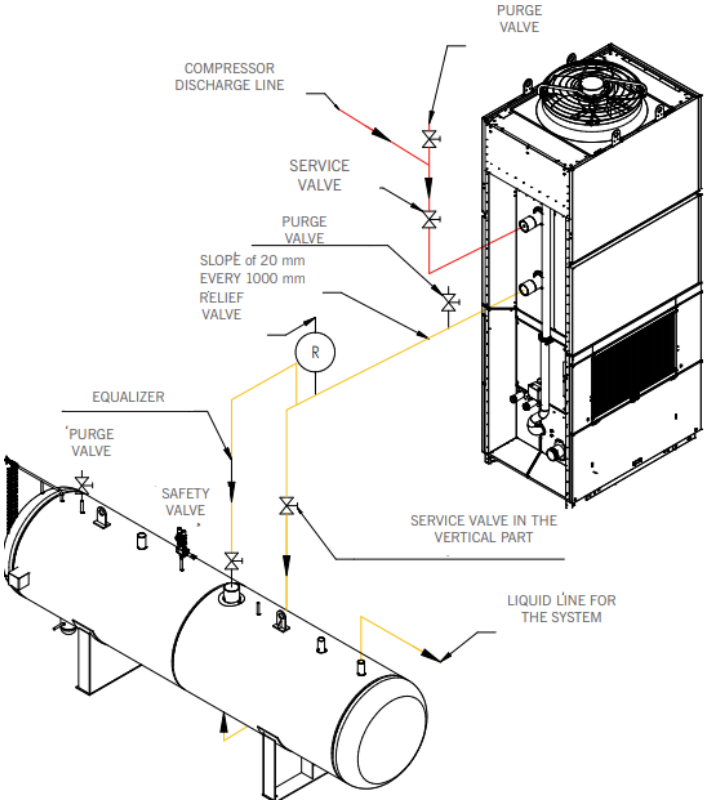

Figure 8 - Installation of a single evaporative condenser with the condensed liquid line at the bottom.

WARNING
If you have any questions, please consult Güntner's technical team. The outlet connections of the evaporative condensers have been designed in accordance with international standards and recommendations and carefully developed for your application. Therefore, it is recommended not to reduce the size of these lines. There are many condensers in operation with concentric reductions and valves in the horizontal portion of the liquid lines; **such an arrangement should NEVER be considered**. This type of unit will be operating with liquid accumulated in the coil, causing loss of capacity and other potential problems. To optimize capacity and reduce pressure drop, carefully follow the recommendations provided using the line sizing criteria under maximum load conditions.

5.3 Condensed liquid lines – parallel condensers

These lines are responsible for connecting multiple condensers to balance the refrigerant flow. Multiple condensers in parallel must be correctly connected to allow for maximum and stable operation under any load conditions and environmental variations. Some installations that are incorrectly connected will operate under normal load conditions when all units are in operation. However, under partial load or full load conditions the system becomes unstable.

There may be large fluctuations in liquid reservoir levels or even some of the condensers may start to operate with low efficiency due to possible flooding. These characteristics can be attributed to piping deficiencies. Figure 9 illustrates two condensers connected in parallel to a single high-pressure liquid reservoir. Note that the compressor discharge line piping should be as symmetrical as possible. The previous comments regarding the sizing of these lines also apply to multiple condenser installations.

WARNING
GTECH evaporative condenser blocks are installed across the equipment so that each block is installed in parallel with each other. Therefore, for equipment with more than one block, the following guidelines must be followed to ensure its thermal performance.

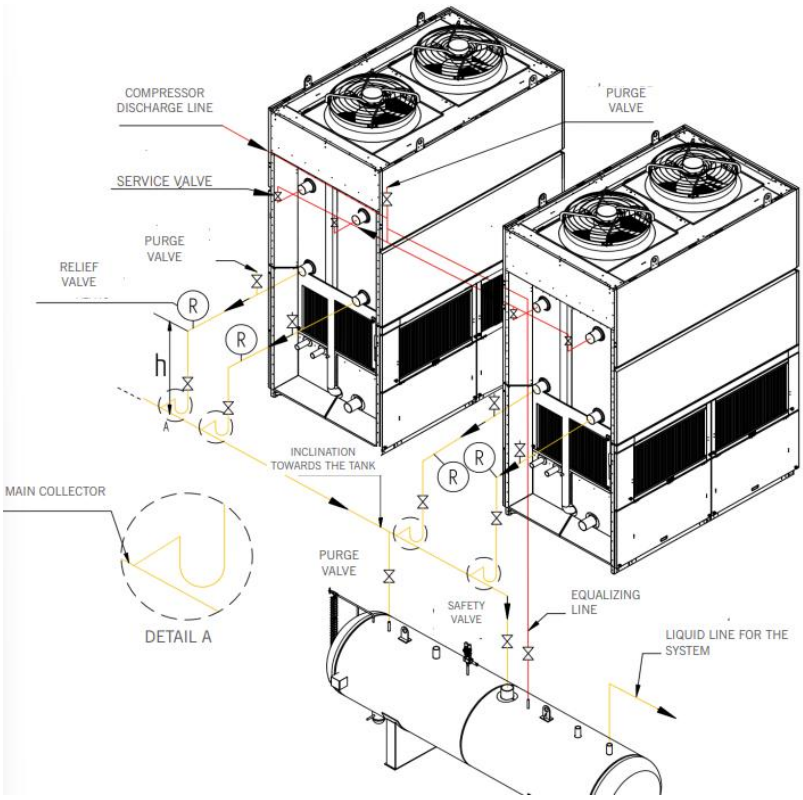

Figure 9 - Parallel evaporative condenser installation.

The vertical portion of the liquid column should be sized as a liquid line. This line from the horizontal manifold to the liquid reservoir should be sloped 20 mm/m toward the liquid reservoir and sized according to the flow velocity mentioned above. Note that the horizontal manifold itself is not siphoned. The most important aspect of connecting multiple condensers in parallel is the connection of the condensed liquid line from the condensers to the liquid tank.

WARNING
THE USE OF A SIPHON IS ESSENTIAL! The liquid outlet line from each condenser must have a siphon in the vertical portion of the line. This can be accompanied by a small siphon as illustrated or by using a pipe with the inlet to the liquid reservoir at the bottom.

The use of a siphon at the liquid outlet, the equalization between the liquid tank and the condenser, and the individualization of the evaporative condenser blocks, when installed in parallel, are of utmost importance for the correct operation of the equipment and to prevent liquid from backing up in the condenser coils. The use of a siphon prevents differences in pressure drop between the coils and/or condensers from interrupting the free flow of liquid to the liquid reservoir. The equalization line is used to ensure free drainage of the condensers, keeping the liquid reservoir and condensers at the same pressure.

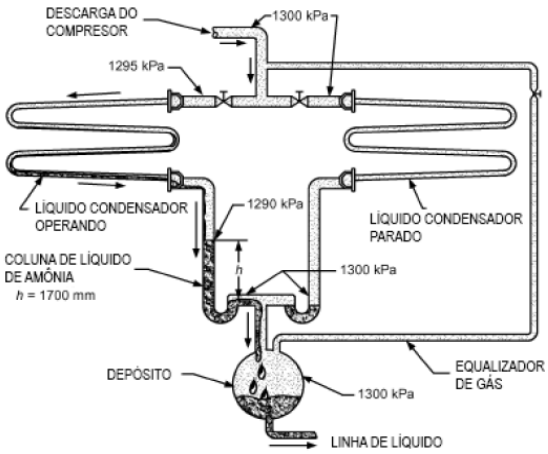

Figure 10 - Pipe installation ensures the correct functioning of the system.

WARNING
Güntner's standard recommendation for the minimum height of the vertical siphon column “H” in Figure 9 is: 1.5 m for ammonia (NH_3); 3.0 m for halogenated refrigerants.

In multiple parallel condenser systems that use an inlet through the bottom surface of the liquid tank, as illustrated in Figure 11. The minimum height "h" is calculated from the highest liquid level in the tank. Both the vertical liquid column and the new horizontal siphoned manifold must be dimensioned as a siphoned liquid line.

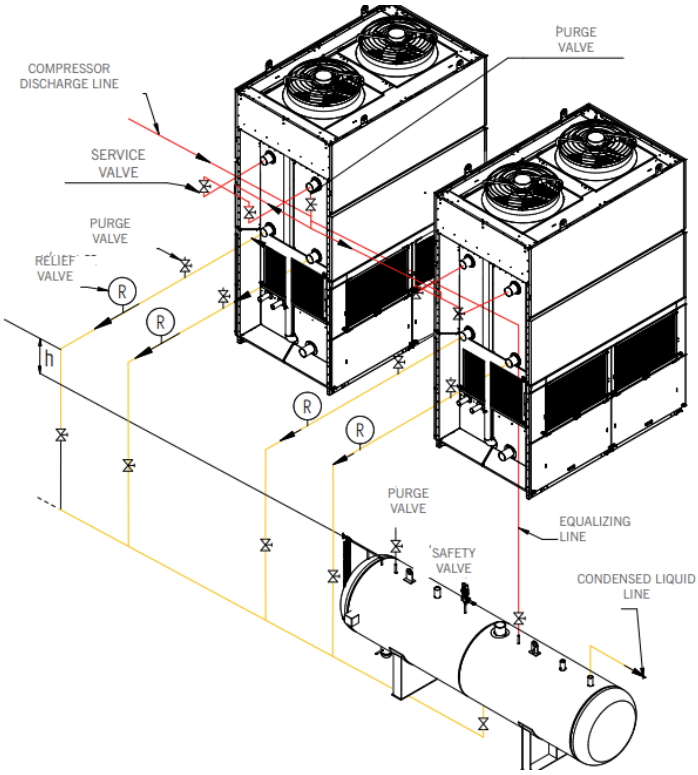

Figure 11 - Installation of evaporative condensers in parallel with the condensed liquid line entering the bottom of the liquid tank.

An alternative method for using siphons at liquid outlets in multiple condenser installations is illustrated in Figure 12 . All outlet pipes are connected to a single liquid collector. A single inverted siphon is used to create a liquid seal throughout the manifold. In order to prevent liquid accumulation in the manifold, the equalization line must be connected at the top of the inverted siphon to prevent vacuum formation, as shown in Figure 13.

It is essential to use siphons in these lines in order to build a vertical column of liquid to compensate for potential pressure variations between the condenser outlet pipes. Without these siphoned liquid columns, the refrigerant would remain contained in the coil, causing a large pressure drop (or low outlet pressure), consequently reducing the available capacity and resulting in unstable operation.

This column is the same dimension "h" are the minimum column heights for satisfactory operation within reasonable ranges around the nominal design conditions and are based on the maximum condensing pressure drop of the coil. If shut-off valves are included at the coil inlet and/or outlet, the pressure drop imposed by these valves must be taken into account by increasing the minimum liquid column height recommended above by an amount equivalent to the valve pressure drop in meters of refrigerant liquid column.

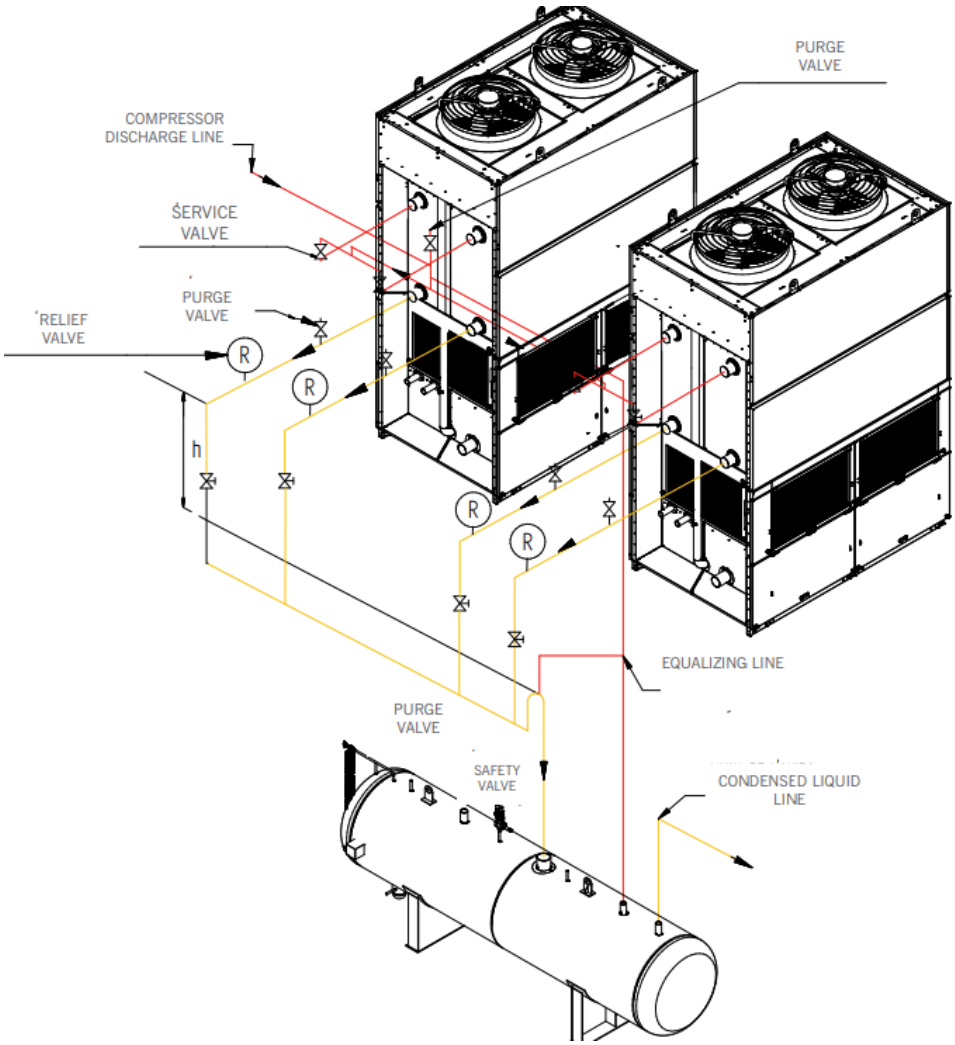

Figure 12 - Installation of evaporative condensers in parallel.

In low ambient temperature conditions, the condenser will have a significant increase in capacity. This increase in capacity will sometimes allow one or more condensers to be shut down, allowing the condenser in operation to work at the maximum compressor load. As a result, there will be an increase

in the fluid flow rate through the unit, and the pressure drop across the coil and piping will be much greater than the pressure drop for "normal design" conditions.

Also, in low-temperature environments, the condensing pressure is sometimes reduced considerably to reduce energy consumption in low ambient temperature conditions. The low density of the resulting gas has the effect of increasing the pressure drop. For the condenser to operate at maximum efficiency in a low-energy consumption system under low ambient temperature conditions, higher liquid columns are required.

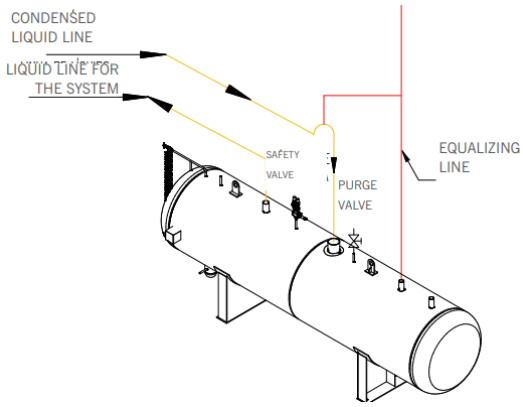

Figure 13 - Detail of the inverted siphon installation.

Whenever possible, liquid columns should be designed to be approximately 50% higher than the minimum recommended height. The equalization line runs from the central separator to a centralized position on the discharge line that feeds the condenser. Under no circumstances should this line be connected to the outlet of multiple condensers, as this will have the same effect as eliminating the siphons. This will cause liquid to accumulate in the condensers with even lower outlet pressures.

Often, an evaporative condenser can be installed in parallel with a plate-type condenser, as illustrated in Figure 14.

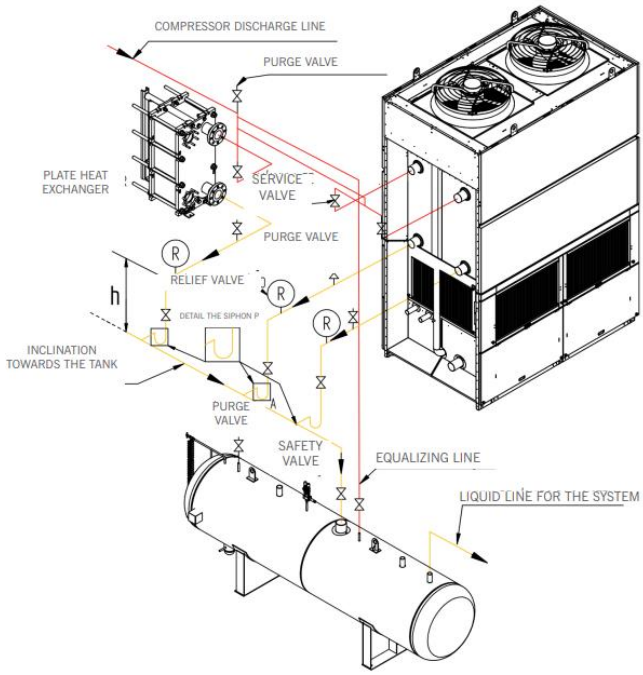

Figure 14 - Installation of an evaporative condenser in parallel with a plate heat exchanger.

The same considerations for piping apply in this case, although the pressure drop in the plate heat exchanger is generally much lower. Therefore, the height of the liquid column in the plate heat exchanger can be minimized to as little as 0.3 m. Basically, this type of condenser only needs to be located high enough above the liquid tank to obtain liquid flow.

5.4 Liquid tanks and equalizers

The liquid reservoir allows refrigerant to be stored for periods when the system operates with the necessary refrigerant load fluctuations for both the high and low lines of the system, as well as for maximum load and changing operating conditions. It also allows the condenser to be completely drained, so there is no effective loss of condensation surface area due to liquid stored in the coil. Depending on the ambient conditions to which the liquid reservoir is subjected, it may contain either subcooled gas or superheated liquid.

An equalization line is required to alleviate this potential condition of pressure differences. Therefore, to allow the liquid to drain freely from the condenser, the liquid reservoir must be equalized with the pressure of the hot gas discharge line. In the case of a single condensing unit as shown in**Erro! Fonte de referência não encontrada.** , where the condensate line is not siphoned, equalization can occur in the condensate line itself, provided it is properly sized.

If the liquid from the condensate line for a single condensing unit is siphoned, as in**Erro! Fonte de referência não encontrada.Erro! Fonte de referência não encontrada.** , then the equalization line must be connected to the liquid line directly through the condenser outlet or through the discharge line just ahead of the condenser inlet. If connected to the discharge line, then the height of the liquid column must be sufficient to compensate for the pressure drop across the condenser coil, as explained in the previous items.

For multiple condenser installations the equalization line always connects the liquid reservoir to the discharge line point located at the condenser inlets as symmetrically as possible. Never equalize at the condenser outlet in multiple unit installations, as this destroys the effect of the siphon liquid column.

5.5 Thermosiphon oil cooling

Thermosiphon oil cooling is one of the best-known means of cooling compressor oil. Condensed liquid refrigerant flows from the evaporative condenser to a distribution tank. This feeds the oil thermosiphon by gravity. In the oil thermosiphon, part of the liquid is vaporized in the oil cooling process. The mixture of liquid and gas refrigerant returns to the distributor tank, and the vapor generated is separated and returns to the condenser through the equalization/gas return line. The rest of the liquid refrigerant flows from the distributor tank to the main tank and then to the system.

The distributor tank serves as a refrigerant tank whose main function is to feed the compressor's oil thermosiphon. Priority is given to oil cooling liquid over the liquid feed system. In addition, the liquid outlet to the thermosiphon is located at the bottom of the distributor tank and sized using the criteria of the liquid lines described. The refrigerant is released after flooding the distributor tank from the liquid drain. The height of the liquid column is measured from the condenser liquid line to the distributor tank drain elevation shown by dimension 'h' in Figure 15.

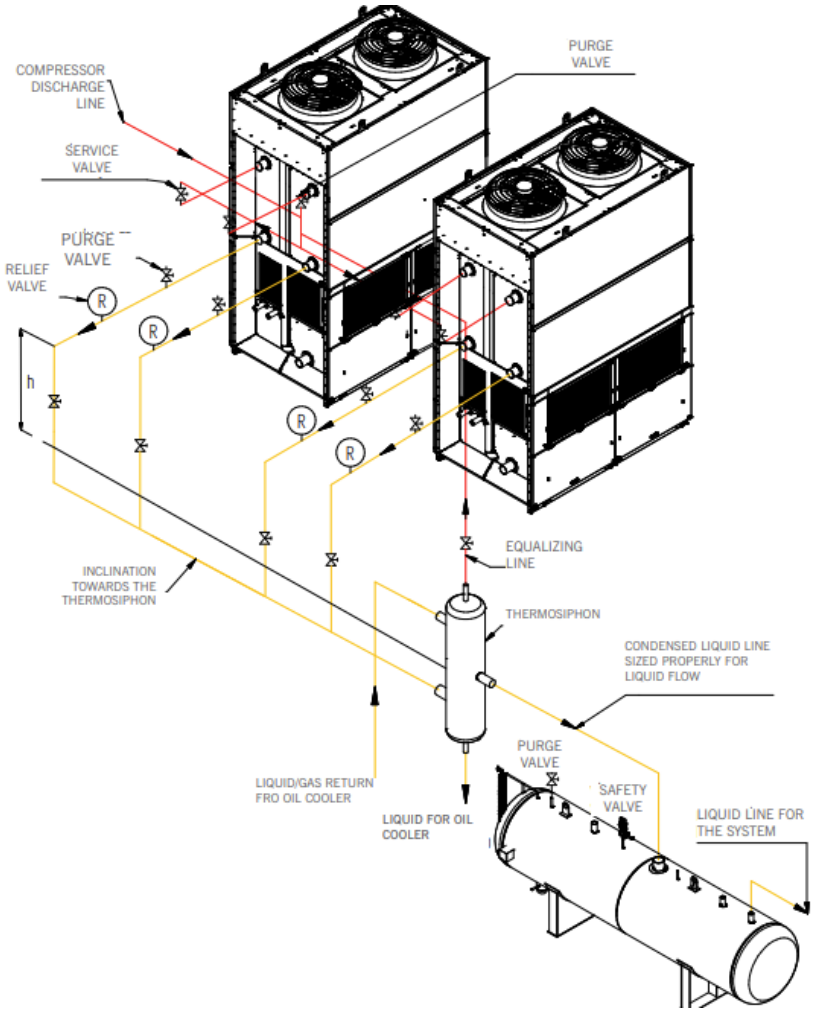

Figure 15 - Installation of evaporative condensers with thermosiphon.

5.6 Additional subcooling

For applications involving long liquid lines or evaporators fed by thermal expansion, subcooling coils can be installed in evaporative condensers to subcool the condensed liquid. Subcooling the refrigerant will prevent the formation of bubbles/flash gas in the liquid line, which affects the thermostatic operation of the expansion valves.

5.7 Refrigeration side purge

Purging is the process of removing non-condensable gases that can affect the efficiency of the refrigeration system, with the aim of achieving maximum efficiency and low operating costs in the condensers and refrigeration system. Air and other non-condensable gases are present and accumulate in the refrigeration system in numerous ways:

- Insufficient vacuum before charging or after the system has been opened for repairs;
- Leaks on the low-pressure side of the system to pressures below atmospheric pressure;
- Addition of low-quality refrigerant containing non-condensables;

- Chemical breakdown of oil and/or refrigerant.

During system operation, non-condensable gases will be carried through the condenser and, in addition, become much more concentrated at the condenser outlet and in the liquid receiver. When the system is closed, they tend to accumulate at the highest point in the system, which is usually at the discharge line near the condenser inlet. The purge connections should be located in the liquid receiver, at the outlet of each coil connection, and at the highest point of the system. Each connection should be separated by a valve, but they can also be interconnected at a single point on the purge line, which may or may not be connected to an automatic purge valve.

Purging during operation is the most common procedure and is generally considered the most effective. It is performed by opening the purge valves at the coil outlets one at a time and also at the liquid reservoir. If the coil outlet purge connection is interconnected, opening more than one valve at a time will cause the condensers' outlets to interconnect. This will prevent liquid from escaping, which could possibly cause liquid to return to the condenser coils. Bleeding at the highest point of the system is only effective when the system is out of operation, as non-condensable substances will accumulate at the top.

5.8 General observations

- Plan for the possibility of future expansion; this is particularly important when sizing the line. Determine elevations above the liquid reservoir and provide adequate space to obtain proper airflow.
- Ensure that the piping is properly designed to allow for some flexibility in terms of expansion, contraction, and vibration.
- Any refrigeration valve in a horizontal pipe must be installed with the valve stem also in a horizontal position;
- In NH_3systems with multiple compressors in parallel, always interconnect the discharge lines and connect a single discharge line to the condensers. In Freon systems with multiple compressors, isolate each compressor circuit or provide adequate oil return from the system to the compressors.
- Insert relief/safety valves in the condensers when service valves are installed at both the inlet and outlet of the condenser. Incidents have occurred when the condenser coil is filled with refrigerant and the service valves remain closed. This is because a change in ambient temperature generates sufficient hydraulic forces to rupture the coil tubes.
- Angle valves are commonly used in refrigeration piping and are acceptable. They must be properly oriented with full bore sizes and provide the same flow resistance as a normal elbow connection (90).
- Pipes should be installed in accordance with appropriate standards and good engineering practices. All piping should be supported by properly designed cross braces and sustained with clearances that allow for possible expansion and contraction. No external load should be placed on the coil connections or the pipe supports on the structure.
- Establish a preventive maintenance schedule for all piping lines to avoid future problems.
- Keep detailed documentation of all installations and maintenance performed on the piping to facilitate future inspections and maintenance.

6 INSTALLATION BASE

6.1 Equipment layout and installation base

GTECH is an induced airflow product line using a four-sided air intake configuration. Properly evaluating the location of the equipment leads to successful installation and proper operation. This manual provides recommendations for various layout scenarios, including placing equipment near an obstruction (e.g., wall). Side-by-side applications should be evaluated with Güntner Product Engineering.

WARNING

- The installation base must be designed to safely and efficiently support the weight and operations of the GTECH Evaporative Condenser.
- Ensure that the installation site is level and properly prepared to support the weight of the equipment. **An uneven base can damage the equipment and cause pump cavitation, resulting in water leakage;**
- The foundation must be sturdy and capable of absorbing vibrations without deformation;
- Ensure adequate drainage around the base to prevent water accumulation that can cause erosion or instability.

It is recommended that the equipment be installed in an open field environment to ensure air flow quality and prevent saturated air recirculation (bypass). Units installed on open roofs and at ground level without any obstructions, such as walls or buildings, will be the appropriate location. However, in many situations this cannot be achieved. Positioning in wells, next to high walls, adjacent buildings, occupied areas, or specific cabinets poses the risk of recirculating saturated air. This will increase the wet bulb temperature and definitely compromise the condenser's performance, typically resulting in higher condensation levels.

Discharge hoods or duct extensions should be used in such cases. Units that are located in a pit or near walls or adjacent buildings should be positioned so that the condenser discharge is higher than these adjacent objects.

If the unit is located in occupied areas or near adjacent buildings, it is good engineering practice that the discharge air is not in the direction of or in proximity to any air intake location for the building ventilation system.

All recommended minimum clearance values indicated as C1 and C2 apply only to GTECH units. These values may also vary depending on the equipment model. The table and figure below illustrate different potential installation layouts in which the unit can be properly installed.

Model	Units	C1	C2
0804	1	1.200 mm	2.500 mm
0808	1	1.200 mm	2.500 mm
0810	1	1.200 mm	2.500 mm
0814	1	1.800 mm	3.000 mm
0818	1	1.800 mm	3.000 mm
0822	1	1.800 mm	3.000 mm
0826	2	1.800 mm	3.000 mm
0832	2	1.800 mm	3.000 mm
0834	2	1.800 mm	3.000 mm
0836	2	1.800 mm	3.000 mm
0840	2	1.800 mm	3.000 mm

The recommendations for distances from walls or obstructions apply to buildings in which the height of the fans is above the height of the wall.

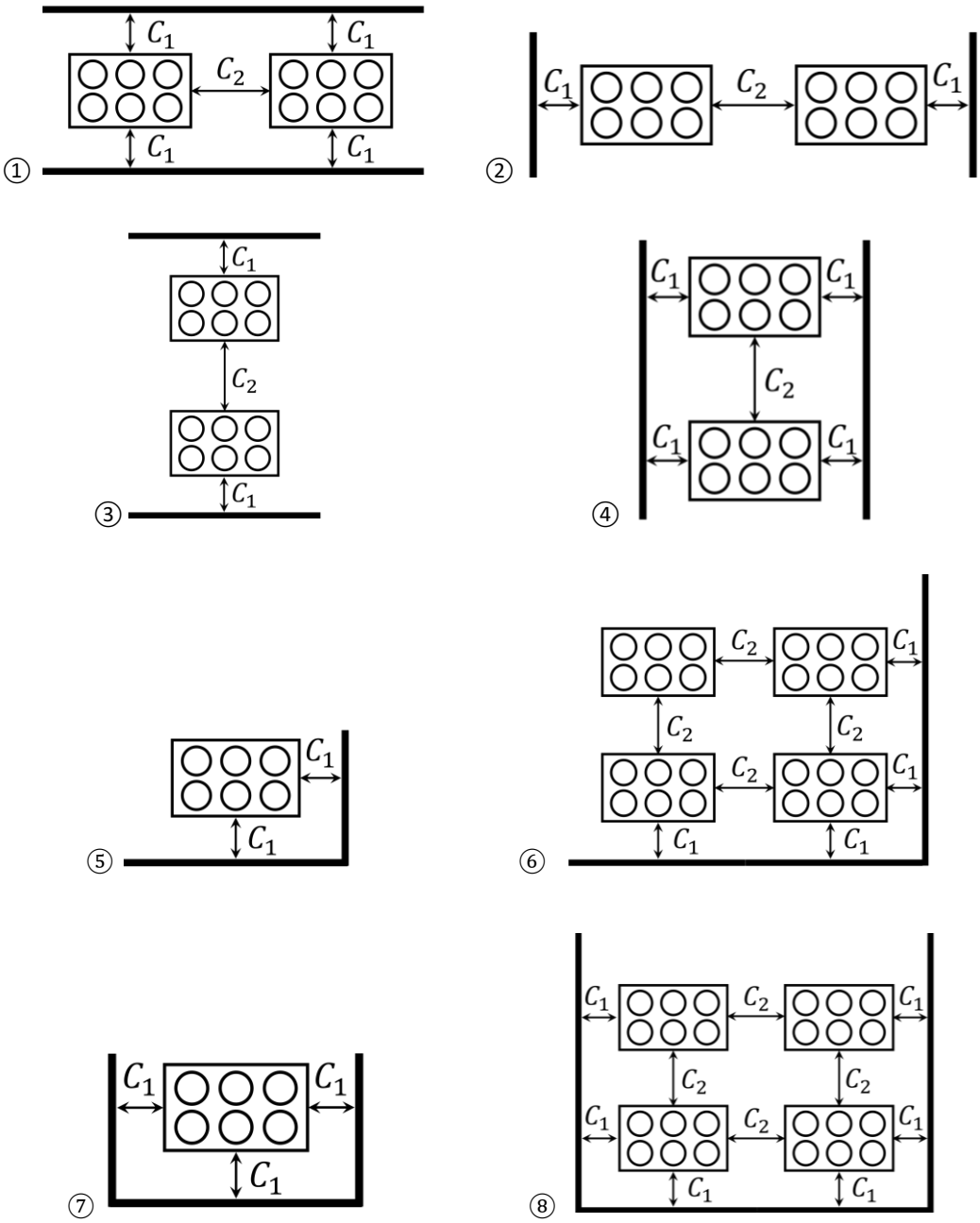

Figure 16 - Illustration of minimum distances recommended for installation.

The equipment model can be identified from the product nomenclature provided in the Güntner documentation and technical datasheet. For example, the GTECH CE S 0804-08.0I/01S.N corresponds to model 0804. Therefore, the minimum required clearances C1 and C2 are 1.2 m and 2.5 m, respectively.

6.2 Support structure

The support structure must provide a solid and secure base for the equipment, minimizing risks during operation. Figure 17 suggests a type of support to suit the project:

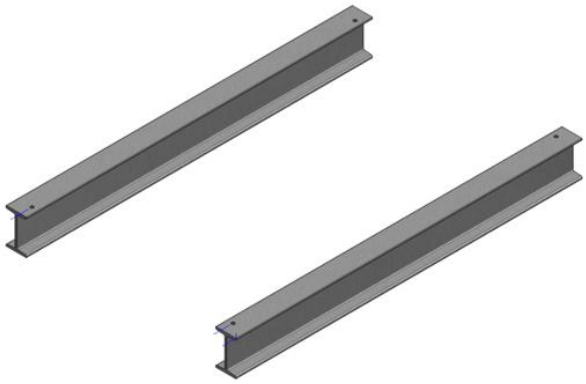

Figure 17 - Illustration of the support structure.

WARNING
The units must be structurally supported with at least two parallel beams that span the entire length of the unit. Leveling the structure is essential for the proper functioning of the condenser.

Refer to the certified technical drawing of the Güntner unit for the locations of the fixing bolts.

All support beams and anchor bolts are not supplied by Güntner and must be selected in accordance with structural engineering standards. When selecting support beams, these must be calculated using 55% of the unit's operating weight as a uniform load on each beam.

The support beams must be level at the top and meet the industry's acceptable tolerance for the total length of the installed unit.

The use of insulating material is mandatory if the base or support structure is made of stainless steel. When this insulating component is not used, corrosion between the materials may occur.

Shims cannot be used to lift the unit, as this compromises the load-bearing surface.

Perform regular checks on the support structure to identify signs of fatigue, corrosion, or structural damage.

Do not leave any unit with shims or temporary supports without proper leveling.

7 INSTALLATION

The unit must be installed in accordance with the technical specifications to ensure safety and efficiency.

⚠ WARNING
Risk of injury and property damage due to refrigerant leakage (see residual hazards with refrigerants); Review all installation plans and equipment specifications before starting work; Incorrect installation may result in working fluid leakage during operation of the installation, which may lead to injury or property damage; Prevent working fluid from leaking from the unit into the environment (see residual hazards with refrigerants); Protect all lines carrying fluids from mechanical damage; Ensure that connections on site do not exert any force above the distribution points and manifold. This can cause leaks at the unit's working fluid connection points and local piping connection points; Coordinate installation with other teams involved in the project to avoid conflicts and ensure smooth integration.

7.1 Module assembly

WARNING
The equipment modules must be moved using a means appropriate for the weight and size of the unit (crane, hoist, overhead crane, etc.). Refer to the "4.5 " section before moving the equipment. **Do not use connection parts or manifolds as attachment points for hooks to suspend, pull, secure, or assemble. This can cause leaks!** Use lifting beams to avoid damaging the equipment. **CAUTION:** The center of mass is shifted to the side of the manifolds!

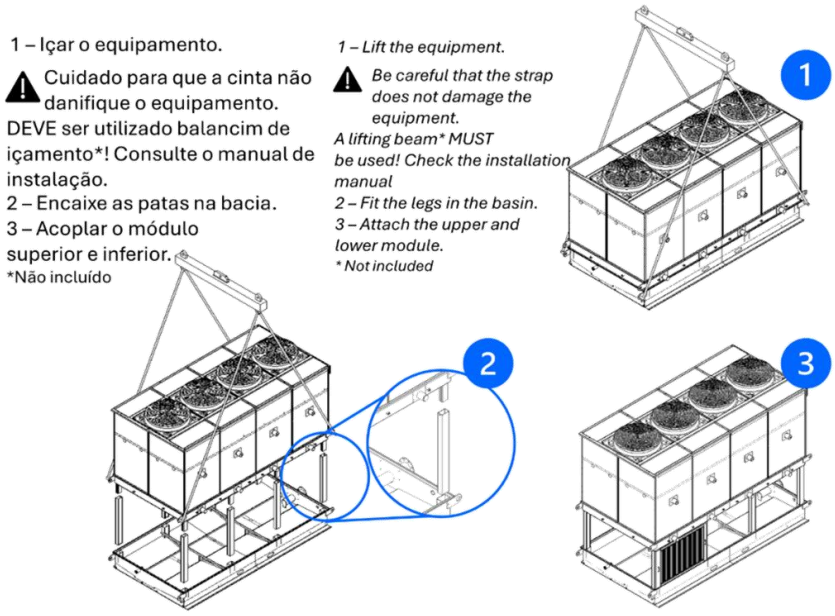

Figure 18 - Instructions for moving and assembling the lower and upper modules.

7.2 Assembly of the louvers

First, attach the metal plate (indicated by number 1) to the points on the equipment indicated by (2), as shown by the arrows in the figure below. Use the knob (3) to secure the plate to the equipment, but keep the knob slightly loose during this step so that it is still possible to tilt the shutter fixing plate.

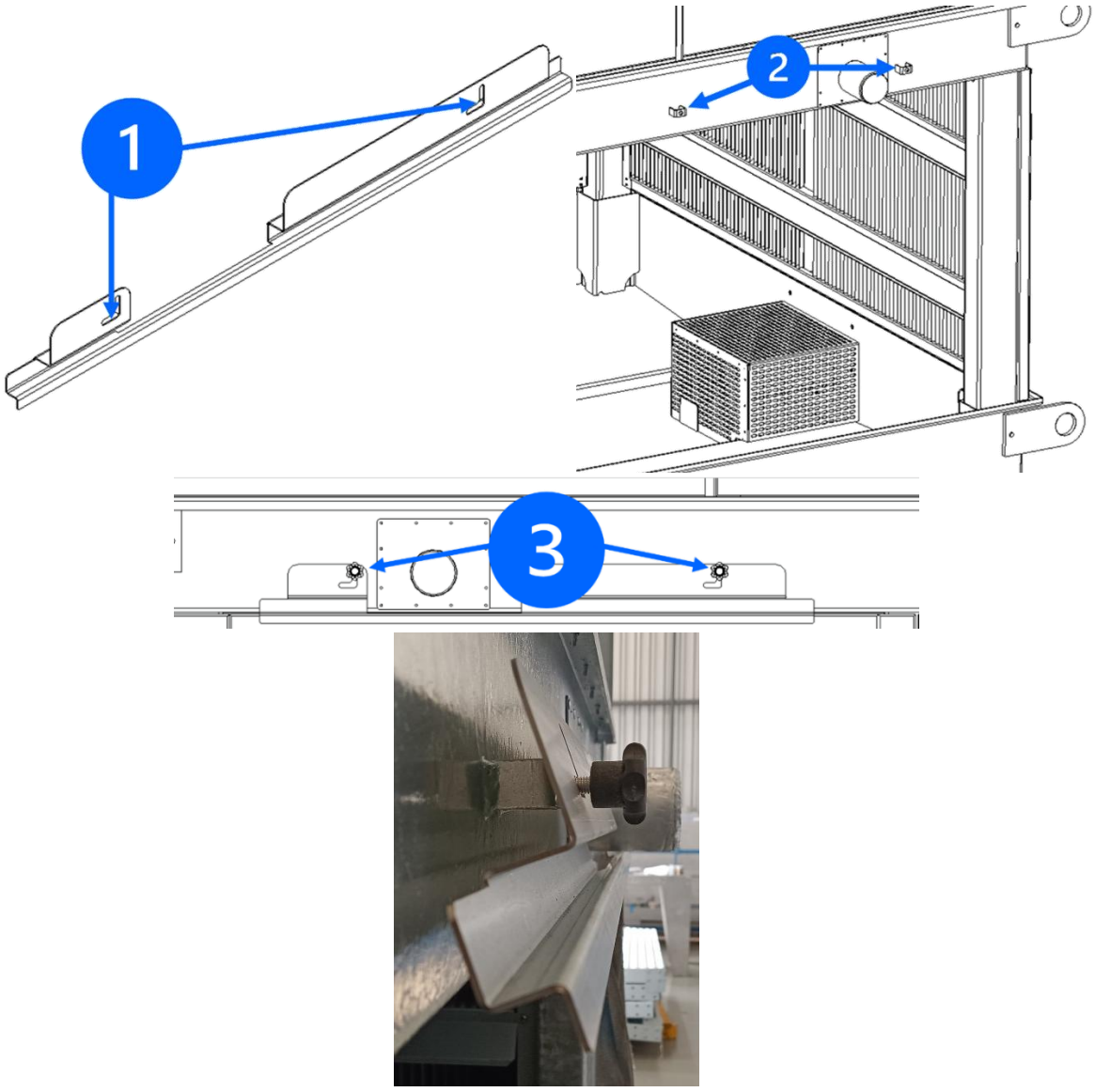

Figure 19 – Mounting the knob on the fixing grid.

Next, install the louvers on the equipment. They must be installed so that the deflector flaps are on the INSIDE of the equipment and facing DOWNWARD to prevent water from falling out of the grids, as indicated in step 4. First, fit the grid into the lower part of the support, as indicated in step 5, keeping it slightly tilted. With the fixing plate (1) raised, step 6, fit the upper part of the louver and then lower the fixing plate and close the handles until the assembly is completely fixed and secure, as indicated in step 7.

Figure 20 - Grid assembly.

7.3 Pump and Recirculation Assembly

Before starting to assemble the pump, make sure that all safety checks comply with the manufacturer's recommendations. Confirm that the pump model matches the specifications in the equipment data sheet and check that all safety checks are in order.

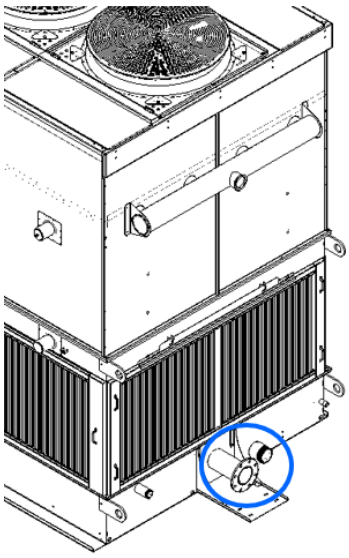

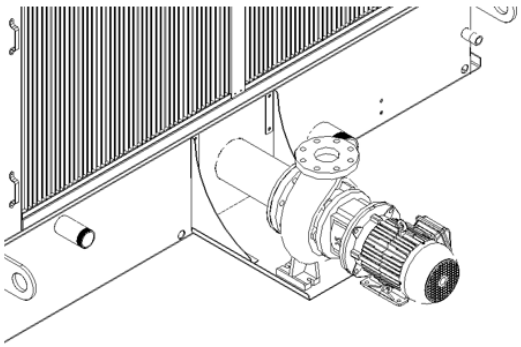

1 – Conectar a bomba à flange.
1 – *Connect the pump to the flange*

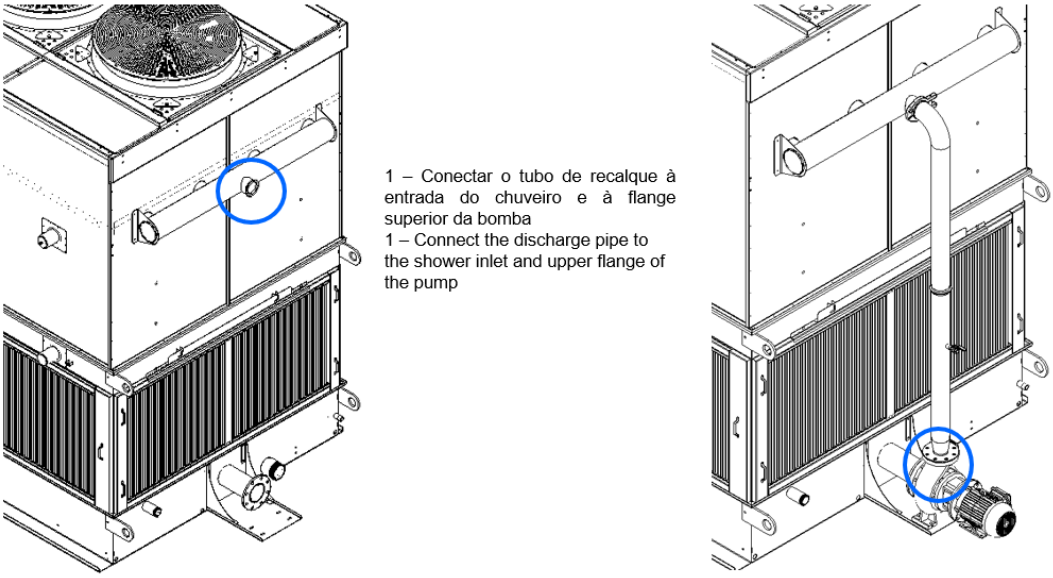

Figure 21 - Pump and discharge pipe assembly.

WARNING
After installing the discharge system, the equipment must be tested. If leaks are identified, it is necessary to inspect and retighten the fasteners according to specifications.

The pump must be installed on a secure foundation capable of supporting its load. A strong concret t be used, with a flat and level surface.

For pumps with flanged suction and discharge connections, the body already has integrated supports. However, it is essential that the pump also be secured to the base using the four bolts located on the feet of the electric motor.

Before positioning the pump in its final location, manually rotate the shaft to check that it is free. After installing and connecting the inlet and outlet pipes, repeat this test to ensure that the shaft continues to rotate without resistance.

Ensure that the pipes are correctly aligned, avoiding any stress or pressure on the pump connections.

7.4 Fan Guard Installation

If the equipment is transported in containers, the fan guards will be shipped separately and must be installed in the field. Installation of the fan guards is mandatory before operating the equipment to ensure the safety of both the equipment and personnel. Installation shall be performed as follows:

1. Position the fan guard over the fan opening, with the mounting points facing the equipment, as shown in Figure 22.

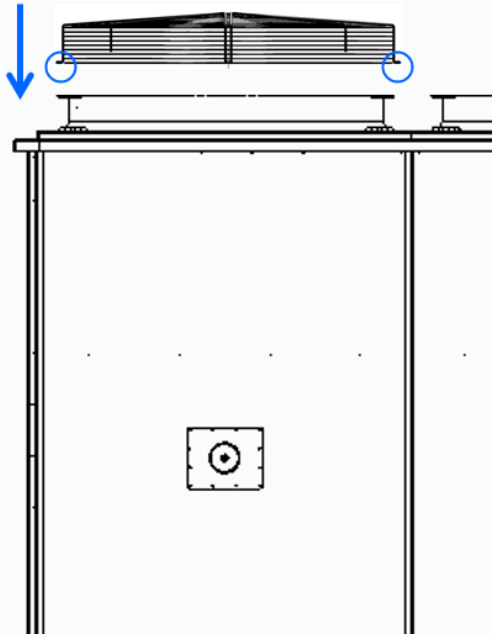

Figure 22 - Fan guard installation orientation.

2. Secure the guard at the mounting points using M8 bolts and locknuts, with washers on both sides, as shown in Figure 23.

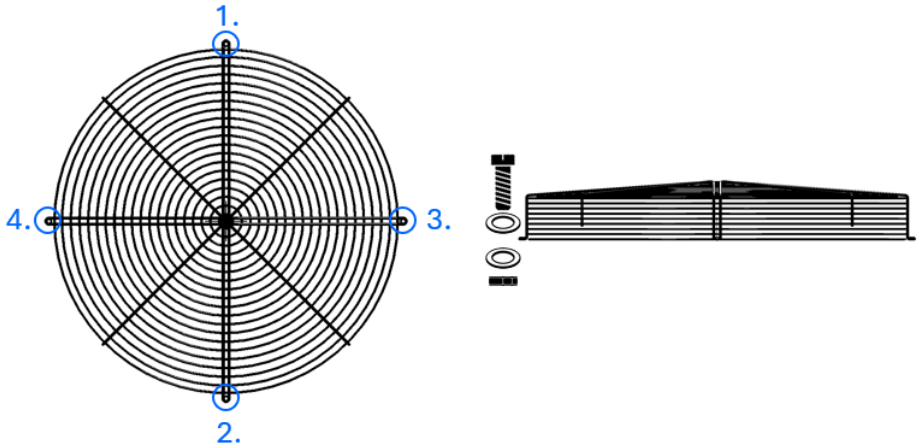

Figure 23 - Fan guard mounting points.

3. Check that the guard is securely fastened and repeat the procedure for all fans installed on the equipment.

⚠ ATTENTION
The evaporative condenser must only be operated with all fan guards properly installed. In addition to preventing accidental contact with rotating parts, the guards protect the motor and fan assembly against falling or foreign objects, helping prevent potential damage during operation. Operating the equipment without the fan guards properly installed will void the product warranty.

7.5 Installation protection measures (NR-12)

7.5.1 Emergency button

The equipment is equipped with an emergency switch located at the bottom of the electrical box.

WARNING
In industrial refrigeration systems, immediate shutdown of the recirculation pump and motor fans can cause significant adverse effects, such as a sudden increase in internal pressure. For this reason, the use of a conventional emergency button is not considered the safest solution for this type of application.

According to NR-12, emergency stop devices are mandatory, but the standard also allows for the adoption of alternative technical solutions that ensure safety without compromising the integrity of the process. Item 12.6.5 of the standard establishes that:

> *"Emergency stop devices shall not be used as start or activation devices, except for manual, self-propelled machines and those in which the emergency stop device does not reduce the risk."*

In the specific case of cooling towers and condensers, immediate total shutdown can increase operational risk rather than reduce it. Therefore, the system was designed to automatically activate the recirculation pump and fans at full capacity (100%) in the event of a failure. Benefits of this approach:

- Pressure control: Accelerating the fans and pump increases heat dissipation capacity, preventing pressure spikes in the system.
- Leak prevention: Reduces the likelihood of potentially toxic fluid leaks caused by overpressure.
- Component protection: Minimizes the risk of damage to critical parts of the system, extending the equipment's service life.

This strategy is aligned with the principles of collective protection and adoption of existing technical solutions provided for in NR-12, promoting safe and efficient operation of the refrigeration system.

7.5.2 Guardrail and ladder assembly

⚠ ATTENTION
It is the customer's responsibility to provide for the proper installation of access ladders and guard s around the equipment, in accordance with applicable safety standards. These devices are essential to ensure the safety of operators during inspections, maintenance, or any other intervention on the condenser.

The customer must restrict and/or segregate access to the ladder and guardrail, allowing only authorized and trained personnel to enter. Unauthorized access poses a risk to the physical integrity of individuals and the safe operation of the system.

Any and all activities performed on the condenser must comply with the Regulatory Standards (NRs) in force, especially those related to working at height (NR-35), safety in machinery and equipment (NR-12), and others applicable to the installation environment.

Before any intervention on the equipment, it is mandatory that the system be completely shut down. Safety locks (lockout/tagout) must be applied to prevent accidental reconnection during the execution of services. This measure is essential for the protection of the professionals involved.

Only properly trained and qualified professionals should perform maintenance, inspection, or operation activities on the equipment. Negligence in this regard can result in serious accidents and compromise

the integrity of the system.

To install the guardrail, start by attaching the upper connectors to the vertical tubes and repeat this procedure on all of them according to step 1 in Figure 24. Then position the vertical tubes so that the connectors face away from the equipment as shown in step 2.

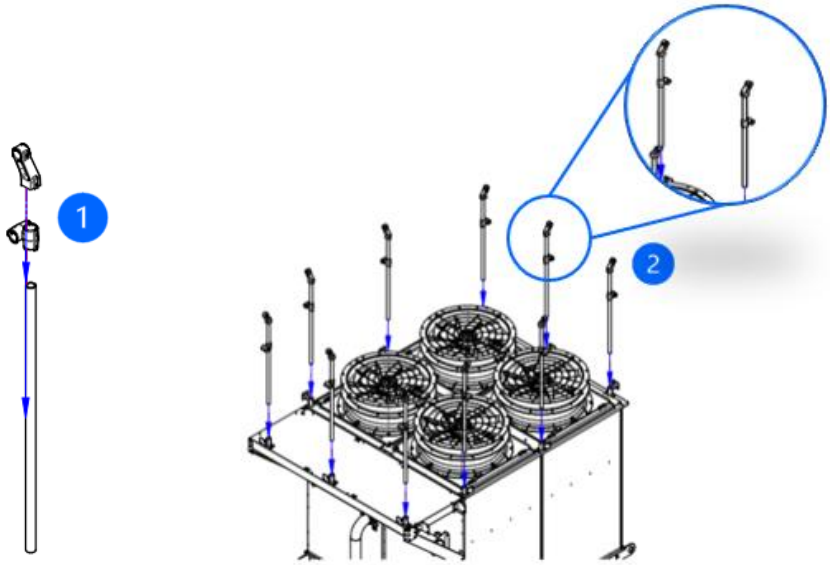

Figure 24 - Assembly of vertical tubes.

Next, attach the horizontal tubes to the previously installed connectors (step 3 in Figure 25) and, finally, place the elbows as indicated in step 4.

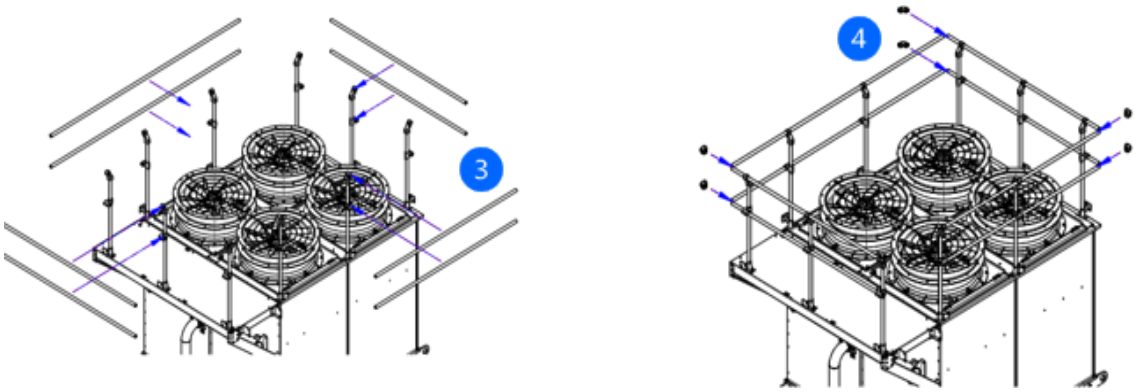

Figure 25 - Assembly of the horizontal pipes.

Finally, install the baseboards by attaching them to the bottom of the vertical tubes, following the instructions in step 5 of Figure 26.

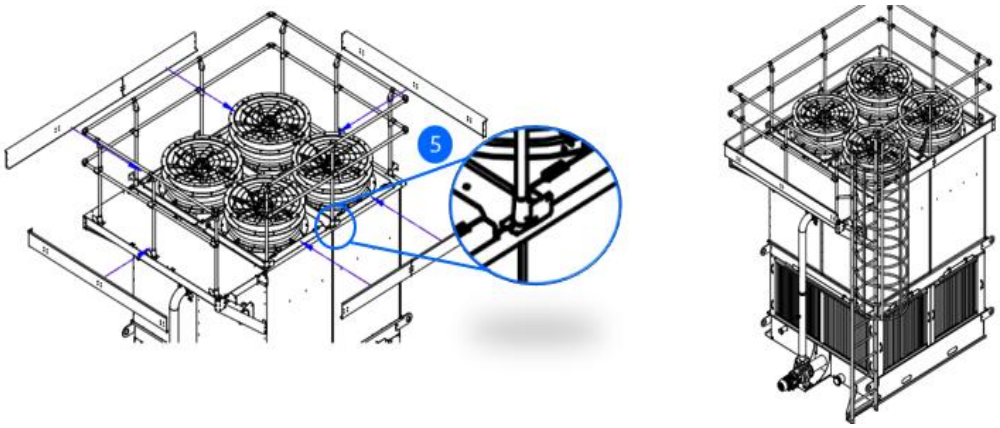

Figure 26 - Guardrail assembly.

To install the ladder, attach the hinges to the top of the equipment. Then attach the bars to the bottom as indicated in steps 7 and 8 of Figure 27. Finish by attaching it to both the top and bottom of the equipment.

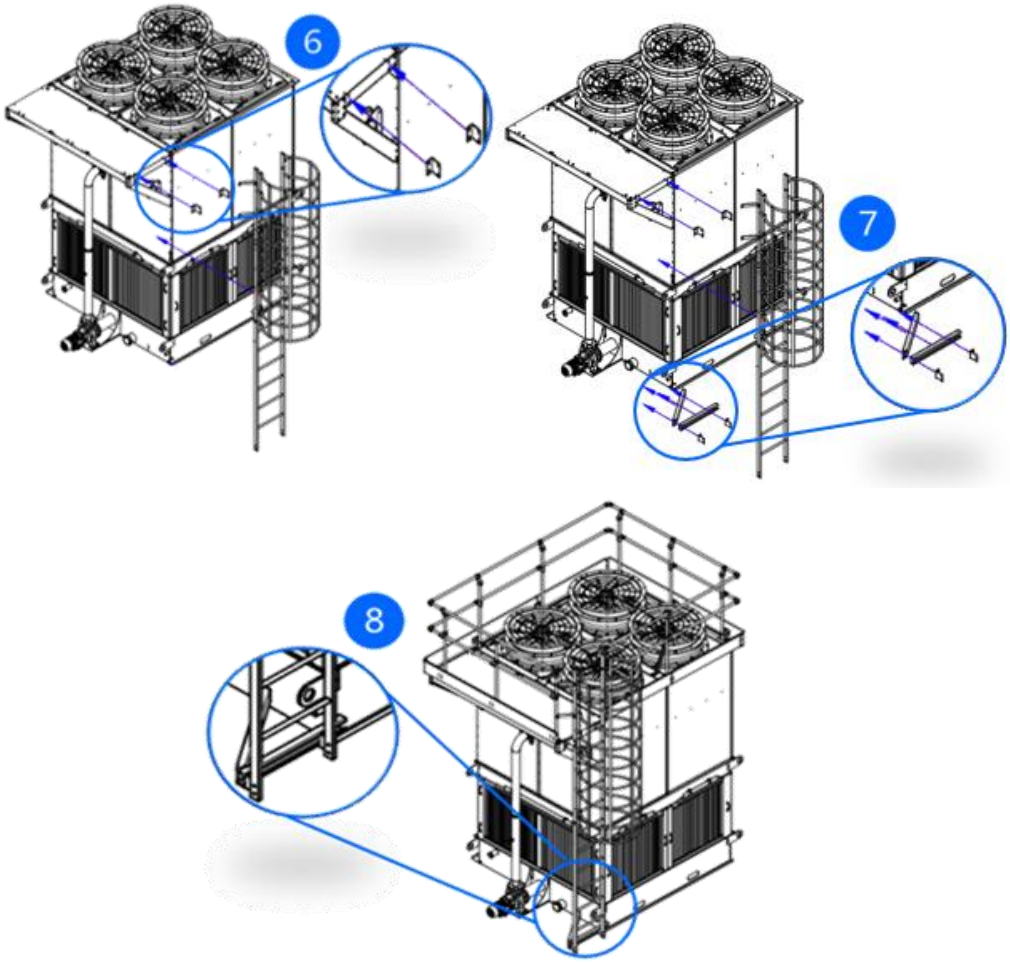

Figure 27 - Ladder assembly.

⚠ ATTENTION
Upon completing the assembly, check the fastening of all components to ensure the stability and safety of the structure.

7.6 Connecting the water pipe to the tray

Do not tighten threaded connections with an inappropriate tool;

Install the drain pipe completely free of tension;

The diameter of the water drain pipe must be at least that of the unit's water drain, and the water drain pipe must be installed with a slope of 3° to 5°;

WARNING
Risk of damage! Plastic threads can be damaged by excessive torque. Use only your hand, no wrench is required for tightening; It is crucial that the water pipe from the tray is connected correctly to prevent leaks and other operational problems; After installation, check all connections for leaks.

7.7 Motor opening

GTECH motors must only be opened by qualified professionals who specialize in this type of service, following safety standards and manufacturer specifications. Before any intervention, it is essential to disconnect the power supply and ensure that the equipment is completely de-energized.

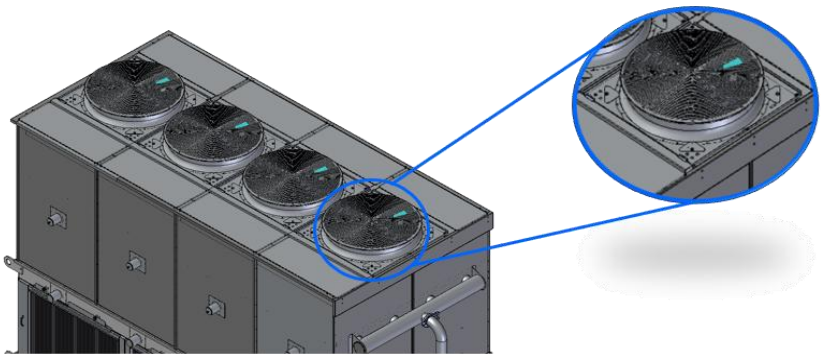

Figure 28 - GTECH motors.

First, loosen the hexagonal screws located at the ends of the cover, as indicated in step 1. Then lift the cover upwards following the instructions in step 2.

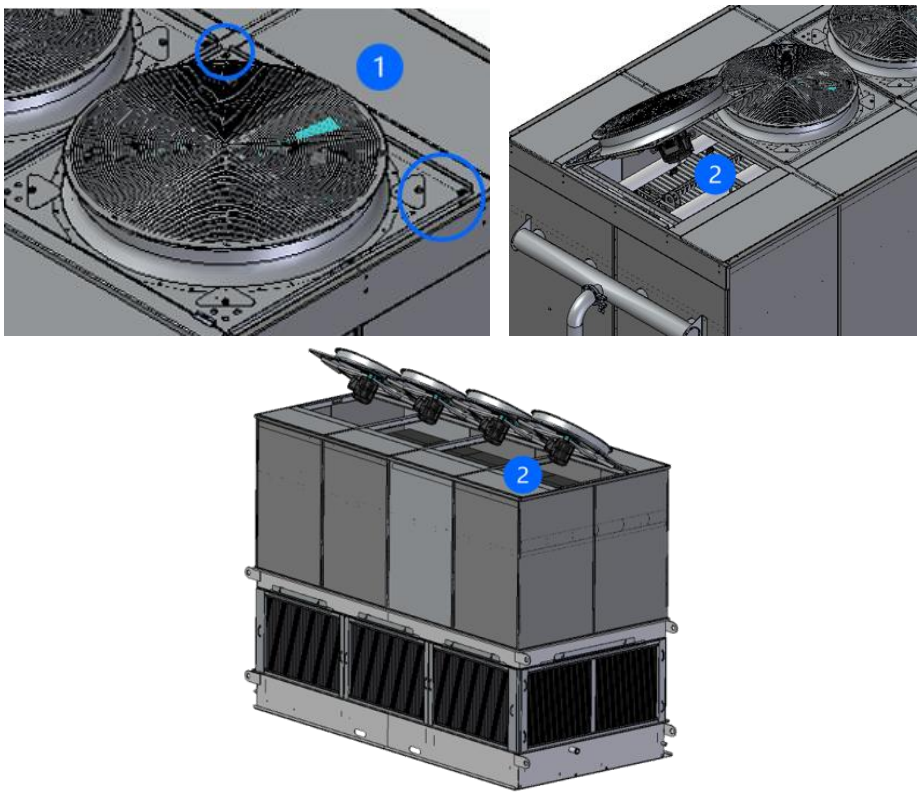

Figure 29 - Opening the GTECH motor.

7.8 Installing the unit in the system

⚠ WARNING

Incorrect connection to the system causes leaks that result in the escape of working fluid, which may be toxic (see

Residual hazards from the refrigerant process);

Welding on pressurized parts can result in fires or explosions. Work is only permitted on depressurized units. Empty the equipment correctly;

Install only stress-free working fluid connections! The on-site piping system must be secured with clamps before connecting to the unit;

The use of open flames at the installation site is prohibited. Fire extinguishers and extinguishing agents used to protect equipment and operating personnel must comply with safety regulations;

Check that refrigerant detectors and alarm systems to warn of explosion or fire hazards, concentrations harmful to health, and for control purposes at the unit's configuration point are arranged in accordance with safety standards. Install piping in accordance with safety standards.

Check:

- Whether the connections are easily accessible;
- Whether the piping installation is kept as short as possible;
- Whether the free space around the unit is large enough to ensure that there is no risk to the unit and to allow regular maintenance of the components, and whether it is also possible to check and repair components, piping, and connections;

- It must be possible to shut down the unit in the event of a leak;
- It must be possible to activate all devices designed to divert the working fluid to a safe storage location;
- Electrical components for fan operation, water pump operation, and the alarm system at the installation site must be designed taking into account the temperature and humidity conditions of the environment. All connections must be welded in accordance with good welding practices and standards;
- If water recirculation is occurring;
- Leak prevention tests;
- Prevention against excessive heating during welding;
- Use of purge gas during welding. The equipment is manufactured with stainless steel manifolds and shipped with carbon steel tips already welded to facilitate connection to the system. Observe the stickers affixed to the equipment connections and the following instructions must be followed.

7.8.1 Installation of inlet and outlet manifolds

The equipment is not supplied with fluid inlet and outlet manifolds, and the customer is solely responsible for their correct construction and installation in accordance with the technical specifications indicated. It is recommended to consult the table below during design and installation, checking that the dimensions chosen meet the specific operating conditions of the system.

WARNING
The size of the manifolds must be selected based on the thermal capacity of the equipment, . The correct choice of manifold size is essential to ensure the efficiency of the condensation system, avoid excessive pressure drops, and ensure uniform water distribution over the condenser.

Capacity Q [kW]	Capacity q [kcal/h]	Piping Ø [inches]	Number of connections
Up to 477	Up to 410,000	3	1
From 477 to 954	From 410,000 to 820,000	4	1
From 954 to 1,919	From 820,000 to 1,650,000	5	1
From 1,919 to 2,390	From 1,650,000 to 2,055,000	4	2
From 2,390 to 3,826	From 2,055,000 to 3,290,000	5"	2
From 3,826 to 5,292	From 3,290,000 to 4,550,000	5	3

If the specific conditions of your project are not covered in the sizing table provided, or if you have questions about the application of collectors in particular installation situations, we recommend that you contact our technical team for guidance.

7.8.2 Important considerations for the installer of the unit

WARNING
When connecting the equipment's inlet and outlet manifolds to the refrigeration circuit, be careful with welding and grinding residues. This is to prevent them from coming into contact with the equipment's fairing, which will result in carbon oxide contamination, altering the equipment's appearance and the durability of the closure. It is essential that the connection be made with the insulated casing to prevent contamination. Failure to strictly comply with this guideline will void the warranty on the equipment casing.

Strictly follow the manufacturer's instructions for components and installation procedures.
Leave sufficient space around the unit to allow easy access for future maintenance and repairs.
Observe the labels affixed to the equipment's casing!

7.9 Grounding

The grounding system is a protective measure for the electrical assembly and is essential for the equipment to perform at its best.

WARNING

Poor grounding can cause:

- Risk of injury, death, and property damage;
- Unpredictable equipment behavior;
- Reduced system reliability;
- Formation of "ground loops"

WARNING

Failure to ground may cause burning and melting of EMC filter capacitors.
Improper grounding voids any warranty on electrical components.

It is the responsibility of the customer/installer to correctly size the grounding.

7.9.1 Grounding and power cable sizing

The conductive material must be the same for the grounding cable!
The cross-section of the protective conductors (ground) is defined according to the cross-section of the building's phase conductors. The table below shows the values according to NBR 5410:2004:

Cross-section of phase conductors S (mm^2)	Minimum cross-section of the protective conductor (mm^2)
S ≤ 16	S
16 < S ≤ 35	16
S > 35	S/2

WARNING

The ohmic resistance of the grounding must be as close to zero as possible, **with a maximum allowance of 5Ω.**

7.10 Electrical installation

The electrical installation of the equipment must be performed by a qualified and licensed professional, in accordance with applicable standards and good engineering practices. Before starting any electrical work, make sure that the equipment is completely de-energized and that lockout procedures are in place.

Check the equipment nameplate to confirm the electrical specifications.

⚠ ATTENTION

The power supply circuit must be sized to withstand the starting current of the motors, which can be 6 to 8 times the rated current. Check the fan and pump technical data sheet!

Conductors and protective devices must be sized considering:

- The total current of the equipment;
- The ambient temperature and circuit grouping;
- Maximum voltage drop of 4% between the distribution panel and the equipment;
- Minimum capacity of the circuit breaker or disconnect switch of 125% of the total current;
- Each motor must have protection against overload and short circuit.

After energizing the equipment, briefly activate each motor and check the direction of rotation of the fan e nd water pump. If any motor rotates in the opposite direction, de-energize the equipment and reverse two phases of the power supply to that specific motor.

Before continuous operation, perform the following visual and electrical inspection tests:

- Check that all connections are tight;
- Confirm that there is no damage to the cables and insulation;
- Check the integrity of protective devices;
- The power supply voltage must be within ±10% of the nominal voltage;
- Confirm the correct phase sequence (R-S-T);
- Check the continuity of the grounding with an ohmmeter.

⚠ WARNING

- Never operate the equipment with open electrical panels;
- Do not remove protective devices or interlocks;
- Keep the electrical panel area free of water and excessive moisture;
- In case of frequent tripping of protections, investigate the cause before resetting;
- Only qualified personnel should perform electrical maintenance.

WARNING

If the equipment was purchased with Güntner electrical installation, refer to the electrical diagram provided for specific details on the configuration of your heat exchanger model.

7.11 Performance acceptance test

Refrigerant release can cause injury or even death. Perform the following acceptance test with a specialist before starting the unit and after making major changes:

- Check that the air temperature and humidity at the operating point correspond to the technical data corresponding to the order.
- Verify that the power source is sufficient for the required power. Compare the unit within the system with the system plans and electrical diagrams.
- Check for vibrations and movements in the unit that may be caused by the fans and system operation. Remove oscillations, vibrations, and movements after consulting with the manufacturer or

independently;

- Perform a visual inspection of the structural design, supports, and devices (materials, connections, etc.);
- Check and retighten all threaded connections;
- Check the installation of pipe connections;
- Check that the unit is protected against mechanical damage;
- Check that the unit is protected against unacceptable heating and cooling;
- Check that maximum control and accessibility of the unit is ensured;
- Check that the unit is installed so that it can be monitored and controlled from all sides and at all times;
- Check that sufficient space is provided for maintenance;
- Check that all components, connections, and lines that carry liquids, as well as all electrical connections and pipes, are easily accessible;
- Check that the piping is easily identifiable;
- Check for dirt on the coil surfaces;
- Perform function tests on the fans (rotation, direction, power consumption, current, etc.);
- Check for damage to the electrical connections of the fans;
- Check the quality of the welds on the connections, the electrical connections, and the general connections;
- Perform a test run. Observe and check the unit during the test run, in particular for:
    1. Smooth operation of the fans;
    2. Fan energy consumption;
    3. Water recirculation;
    4. Leaks;
    5. Check the quality of the electrical power supply; voltage drops in the network burn electrical components.

Report all defects to the manufacturer immediately; any procedure should only be carried out after consulting the manufacturer. Check the unit and its interactions with the system again after 48 hours of operation, especially the connections and fans, and document the test results.

7.12 Operational readiness test

Before starting full operation, conduct a readiness test that includes all operating systems:

- Verify that all electrical protection measures are ready for operation;
- Check the quality of the power supply; voltage dips cause components to burn out;
- Check that all connections carrying working fluid are properly connected and welded;
- Check that all electrical connections (fans, motors, water pump, electrical panel) have been connected in accordance with current safety standards;
- Check that all water connections on the unit have been installed correctly.

8 COMMISSIONING

8.1 Initial precautions

Before starting commissioning, ensure that all necessary safety checks and preparations have been completed to avoid risks during operation.

Confirm that all components are correctly installed and undamaged.

Ensure that all technical documentation has been reviewed and is accessible.

The installation supervisor must have all relevant system drawings, including the engineering flowchart, electrical diagrams, and design data for system operation, as well as the operating limit conditions.

The project manager must have all qualification documentation for startup activities and must conduct the process together with the installation supervisor.

⚠ ATTENTION

When working with ammonia, before the first charge, a check must be carried out to ensure that all emergency systems are functional, including escape routes, eye wash stations, and showers, and that the necessary PPE (personal protective equipment) is available and easily accessible to the professionals involved.

All personnel from other areas of the unit (outside the refrigeration facility) must be notified that ammonia will be loaded. Access to the area should be restricted to authorized personnel only, and those not involved in the operation should be kept out of the risk area. A visual inspection of all piping, electrical interconnections, and the condition of the shut-off valves (according to their normal operating condition) should be performed to certify that the system is ready to receive the ammonia charge.

During commissioning of the electrical installation, the equipment control panels must be inspected internally and externally to ensure that all specified equipment and components have been correctly installed and that all circuit breakers and fuses in the panels have been correctly sized as indicated in the specification. Before energizing any part of the electrical circuit of the installation, an insulation test of all cables must be conducted to ensure that there are no insulation faults. It is recommended that a test certificate be issued.

For control panel testing, all fuses and circuit breakers for the main and auxiliary equipment motors (including compressor motors, pumps, fans, etc.) should be removed to prevent unexpected operation. With the equipment motor fuses removed, the coupling (or belts) between the compressors and their motors must be disconnected and the equipment must be manually rotated to verify that it turns freely.

Then, as the fuses are reinstalled, the motors should be tested one by one to verify the correct direction of rotation. The thermal protection setting value for each motor should be confirmed based on the motor's rated current. For compressor motors, in certain cases, it will be necessary to disable some electrical interlocks to test the motor. In this case, the deactivated interlocks must be marked so that they can be reactivated correctly after the test.

After checking the direction of rotation of the motors, the motor power cables must be isolated and the motors reconnected. The motors will be aligned with the equipment and the coupling guards will be reinstalled. When these electrical circuit tests are complete, all electrical shutdown protections (for the motors) must be inspected to ensure that the adjustment values are in accordance with the values required in the specifications. Finally, the electrical interlocks of the various control and protection elements (such as level floats with electrical contact, pressure switches, thermostats, flow sensors, etc.) must be tested to certify that the electrical contacts are acting on the motors of the respective equipment.

8.2 System Leak Test

After installation is complete and before thermal insulation is applied, the refrigeration system must be tested to certify its tightness or check for any leaks. All parts of the system that have not been previously tested (at the factory or in the field) must be pressurized according to the required design pressures (considering the specific values for the high and low pressure sides). All leaks detected must be repaired and defective material or parts must be replaced.

⚠ ATTENTION

The following fluids must not be used for testing in an ammonia system:

- Oxygen or any combustible gas or combustible mixture of gases;
- Carbon dioxide (CO_2);
- Halogenated refrigerants (HFCs, HCFCs, CFCs);
- Water or glycol solutions.

The use of dry nitrogen or dry air as a pressurization gas for leak testing is recommended.

The following describes the minimum recommended procedures for leak testing.

8.2.1 Preparation

The following components must be closed, blocked, and/or isolated against pressurization:

- Compressor units;
- Safety valves (use shielding disc and gaskets);
- Level indicators (bleed valves, after shut-off valves, must remain open);
- Level controllers;
- Ammonia pumps;
- Air extractor (bleeder);
- Pressure indicators (pressure gauges);
- Any and all low-pressure instruments and accessories;
- All solenoid valves must remain open, either by means of electrical power (if normally closed) or by means of their own manual operating devices;
- Motorized and/or pneumatic valves must also remain open;
- Check valves located at the discharge of the compressor units must be disassembled to remove the internal core, in order to allow pressure to pass through to the shut-off valves;
- All flanges belonging to the piping (if any) must be coated at the joint and a small hole must be made in the upper part.

WARNING

It must be verified in advance, using the plant flowchart, that all piping to be tested (welds, connections, joints, flanges, gaskets, etc.) will be affected by the pressure to be introduced. The flowchart, duly marked with color coding, must be attached to the Pressure Test Certificate. In the case of systems with different test pressures between the low-pressure side and the high-pressure side, the sides must be isolated and the tests must be performed in separate stages, considering the respective pressures required.

8.2.2 Pressurization

1st Stage:

1. Pressurize the installation with dry compressed air and/or nitrogen (inert gas) to a pressure of 2.0 bar;
2. Check the pressure over time to identify any drop that indicates a leak;
3. Carefully check all welds and connections for leaks using a soap and water solution;
4. Mark any leaks observed for later correction;
5. Increase the pressure to 4.0 bar and perform a new leak check;
6. Depressurize the installation and make any necessary repairs.

Step 2:

1. Inject dry compressed air and/or nitrogen until the test pressure is reached (check technical data sheet) under stable conditions;
2. Maintain the test pressure for 2 hours, with a variation of less than 1%, and then reduce it to 10.5 bar;
3. The pressure of 10.5 bar (with a variation of less than 1%) must be maintained for a period of 12 hours;
4. All welds and connections shall be checked again using soap and water solution before the installation is completely depressurized;
5. If any leaks are detected after depressurizing the system, any repairs must be made and the test must be performed again until complete tightness is ensured;
6. Issuance of leak test certificate.

⚠ ATTENTION
Do not perform any repairs with the system pressurized and without a valid procedure!

8.3 Vacuum and dehydration procedure

After certification of the leak test, before applying thermal insulation and before charging with ammonia, the system must be carefully evacuated to remove all non-condensable gases and moisture contained within the system. Evacuation can take 25 to 40 hours to reach the required pressure, depending on the internal volume of the installation, the moisture content inside the system, and the capacity and condition of the vacuum pump used.

The vacuum level to be achieved for systems that will operate with ammonia is approximately 5.0 mmHg.

8.3.1 Preparation

All components that have been isolated for leak testing, except for compressors and ammonia pumps (which, under vacuum, will allow air to penetrate through the mechanical seals), must be opened and/or unlocked. These are:

- Ammonia pumps (when hermetic);
- Safety valves (remove the shielding discs);
- Level indicators (close the purge valve and open the shut-off valves);
- Level controllers (close the purge valve and open the shut-off valves);

- Air extractor (bleeder);
- Pressure indicators (pressure gauges) and pressure controllers (pressure switches);
- Any and all low-pressure instruments and accessories that may be isolated;
- All solenoid valves must remain open, either by means of electrical power or through their own manual operating devices;
- Motorized and/or pneumatic valves must also remain open;
- The check valves located at the discharge of the compressor units must be reassembled.

Equipment to be used:

- Vacuum pump of adequate size (capacity of 10 to 25 Nm^3/h);
- Vacuum gauge with vacuum scale and manifold for service;
- Carbon steel pipe or flexible hose with appropriate stainless steel braiding, with female connections at both ends;
- Nitrogen cylinders.

8.3.2 Vacuum

The pump will be connected during the vacuum process through the charging valve, located at the discharge of the liquid container piping, using a tube or flexible hose.

Evacuation begins and, during the process, the pressure can be checked on the vacuum gauge, where it can be seen that the pressure inside the installation (atmospheric, approx. 760 mmHg) decreases rapidly to about 20 mmHg, or slightly below. At this point, only air and non-condensable gases have been removed.

The pressure then begins to decrease more slowly, as only then does the water begin to evaporate. It is recommended to check the low points where water may be trapped and heat these points to accelerate the evaporation process. When the pressure reaches approximately 5.5 mmHg, about 15 hours after the start of the process, the pump will be turned off for a period of 1 hour and the pressure will be checked on the vacuum gauge. An increase in pressure indicates the evaporation of moisture still in the system. In this case, continue the process for another 10 hours, and then turn off the pump again to check the pressure stability. The process should continue until the pressure reaches 5.0 mmHg and remains stable. The pump will then be turned off and isolated from the circuit, and these conditions will be maintained for another 6 hours.

8.4 Primary ammonia charge

After the vacuum process, the installation will be ready to receive the first ammonia charge. Initially, the charge will be carried out until the system reaches 7.0 bar. It is also recommended that during this period the system be inspected with ammonia detectors. Appropriate masks should be available in case of emergency. At the end, all components, valves, and control elements must be returned to their normal operating position with the system shut down.

8.4.1 Ammonia charging

When using cylinders for ammonia charging, it is recommended to connect only one cylinder at a time. When feeding from more than one cylinder, care must be taken to prevent flow from one cylinder to another by using check valves at each cylinder feed connection to prevent flow into the cylinders.

The ammonia charging valve for the system must be compatible with the size of the system and must

have a check valve to prevent backflow from the system to the charging element (cylinder or tanker truck). The charging point and cylinder should be located outdoors, in a protected area, where there is no risk to the rest of the operating team. The area must be isolated and a warning sign must be posted informing that the system is being loaded with ammonia. When using a tanker truck, it is recommended to pump ammonia into the liquid container using the truck's own ammonia pumps (if available).

In the case of a tanker truck, the ammonia supplier must present the following documentation for the supply to be released:

- Identification of the ammonia load, with information from the ammonia manufacturer, certificate of origin, and certificate of purity (minimum 99.95%);
- Certificate of vacuum procedure in the truck tank before loading ammonia;
- Written procedure for ammonia supply operations;
- Certificate of professional integration for risky activities in the area and certificate of professional training for ammonia supply operations procedures.

The supplier must also provide an appropriate hose and quick-connect coupling for the facility's ammonia loading point. In case of a difference in diameter between the hose and the system's loading connection, **series reducers (assembled on site) cannot be used for the connection**. The supplier must provide an appropriate reduction device that is already mounted on the hose. Before starting the operation, inspect the supplier's hose to verify that it is suitable for the operation and that there is a drain point for final emptying of the hose after loading.

⚠ ATTENTION

Provide plenty of water on site (hose with running water) and use appropriate PPE for the job (at least boots, gloves, and a specific mask).

After installing the hose that connects the tanker truck to the ammonia loading connection point of the facility, the following loading procedure must be performed:

- Record the initial volume of ammonia in the liquid container;
- Open the facility's ammonia loading connection valve (100%);
- Follow the operation according to the supplier's written procedure;
- During the procedure, the ammonia loading operator must remain next to the truck's valve assembly to immediately close the loading valves in case of an emergency;
- When loading is complete, close the facility's ammonia loading connection valve;
- Close the ammonia connection valve on the tanker truck;
- Drain the ammonia residue from the hose section into a drum of water;
- Remove the hose from the ammonia loading connections on the facility and the tanker truck;
- Record the mass of the ammonia charge injected into the installation. To calculate the total mass injected, in addition to recording the volume variation in the liquid container (and subsequently calculating the mass using the density of ammonia at room temperature), it is recommended to weigh each cylinder before and after charging or to weigh the tanker truck before and after charging (when possible).

During the charging procedure, one of the compressors (preferably a two-stage compressor with lower capacity) must be prepared, with the proper oil charge and electrical connection, to start operating. It should be noted that during this period, the compressor will be operating outside the normal operating conditions (pressure and temperature) for which the system was designed.

8.5 System Protection Device Tests

The tests of the compressor protection devices must be performed by the professional responsible for the start-up of the compressors (designated by the compressor manufacturer). The other devices must be tested by the professional responsible for the start-up of the system (designated by the installer) and/or those responsible for the other equipment supplied.

The tests must be conducted and supervised by the engineer designated by the customer as the Commissioning Authority. All devices must be checked in advance to ensure that the field adjustment values are in accordance with the adjustment value established by the Commissioning Authority. All devices must be checked in advance to ensure that the field adjustment values are in accordance with the adjustment value established in the design for each device.

8.5.1 High discharge pressure

This should be the first device to be tested. The setting value of the high discharge pressure protection device of the pressure relief installed on the same operating pressure side of the compressor protection device. For the test, the discharge pressure of each compressor must be increased gradually (by closing the valve in the discharge line, after the pressure tapping point where the device is installed) until the protection device acts, causing the compressor to shut down immediately when the pressure reaches the setting value. If the discharge pressure exceeds the setting value of the protection device, the compressor must be shut down immediately (using the emergency button or instant stop). In this case, the device must be replaced or repaired (the mechanical and electrical elements of the device must be checked) and after correction, the test must be redone.

In compressors with microprocessor control panels, the discharge pressure setting for shutdown can be lowered during the test to facilitate the procedure and avoid excessive pressure in the system. After completing the test, the setting should be corrected to the condition established in the design.

8.5.2 Low suction differential pressure

For the test, the suction pressure of each compressor must be gradually reduced (by closing the suction valve) until the protection device acts, causing the compressor to shut down immediately when the pressure reaches the set value. If the suction pressure exceeds the adjustment value of the protection device, either the compressor must be shut down or the suction pressure must be increased (by opening the valve). In this case, the device must be replaced or repaired (the mechanical and electrical elements of the device must be checked) and, after correction, the test must be repeated.

8.5.3 Low oil differential pressure

The compressor oil differential pressure protection device is normally associated with a timer to prevent the compressor from stopping during start-up when the oil differential pressure is low. This must be taken into account during the test procedure.

The timer test can be performed on a specific bench assembled on site or by isolating the pressure taps of the oil differential pressure device (if there are shut-off valves at the pressure taps). The oil differential pressure protection device can be tested by changing the setting value to a value higher than the design value to facilitate design for each device.

8.5.4 High discharge temperature/high oil temperature

In compressors with microprocessor control panels, it is recommended to change the shutdown temperature setting to a lower value during testing. After the test is complete, the setting should be corrected to the condition established in the design.

8.6 Other protection devices

All other compressor alarm and shutdown protection devices should be tested, including low temperature devices and external protection devices such as liquid level controllers. Protection devices for other equipment, such as ammonia pumps and ice machines, should also be tested. Tests should be performed according to the manufacturer's recommendations.

8.7 Emergency protection systems

The following auxiliary systems should also be tested:

- Normal Engine Room Ventilation System;
- Emergency Ventilation System;
- Emergency buttons (instant shutdown of equipment and installation);
- Main Solenoid Valve of the Liquid Line;
- Emergency Eye Wash Stations and Deluge Showers;
- Ammonia detectors. Tests shall be performed in accordance with the manufacturer's recommendations.

8.8 Assisted operation

After completing the tests on the protective devices, the start-up routines may proceed with the adjustment of control valves and other control elements for the correct operation of the equipment and the system.

During the start-up procedure, the system's operating pressures and temperatures must be monitored and constant inspections for ammonia leaks must be carried out. In the event of any abnormality, the system must be shut down immediately and the causes identified and corrected before returning to operation.

9 OPERATION

9.1 Putting the unit into operation for the first time

The initial start-up of the unit is a critical process that must be performed with care to ensure the longevity and efficiency of the system.

⚠ DANGER
Refrigerant release can cause injury or even death.

Only start up the unit:

- After completing all the steps described in Chapters 7 and 8;
- The units have been assembled and connected correctly;
- After testing to verify that the systems are ready for operation and all safety precautions have been taken. Follow the system operating instructions manual;
- Contact the manufacturer immediately if you wish to operate the unit under operating conditions other than those defined in the design documents related to the order;
- Turn on the system, including the electrical system;
- Activate the unit:
    1. Open the valves on the inlet and outlet sides of the system;
    2. Activate the fans;
    3. Put the water replacement and drain line piping into operation;
    4. Wait until the operating point is reached. Once the operating point has been reached, the unit is ready to operate;
    5. For operating point adjustment parameters, see the design documents related to the order. The operating point parameters are:
        - Condensation temperature and pressure;
        - Air volumetric flow rate;
        - Liquid volumetric flow rate;
        - Wet bulb temperature of air inlet;
        - Altitude;
        - Thermal capacity;

In order to ensure that the specified operating point complies with the actuators, the setting must be protected against unauthorized access.

WARNING
Carefully monitor the operation of the unit during the first few hours to detect any irregularities or operational faults. **If faults occur, inform Güntner's technical team immediately!**

9.2 Removal of the operating unit

To remove the equipment correctly, the fans and pumps must be switched off and disconnected from the general electrical system, and the pumps must be disconnected from the system. To do this:

a. Turn off the electrical system and disconnect the fan and pump wiring;
b. On the fluid side, close the inlet and outlet valves on the pipes;
c. Purging or collecting the refrigerant in accordance with specific standards;
d. Vacuum for at least 24 hours;
e. Disconnect the equipment.

WARNING
When shutting down, consider the maximum operating pressure! If necessary, take precautions so that it cannot be exceeded. The fans must always be connected to the power supply with a minimum operating speed in order to keep the internal temperature higher than the external temperature. After shutdown, apply appropriate conservation measures to prevent corrosion or other damage during the inactive period.

⚠ ATTENTION
When the equipment is operating with ammonia (NH_3), the following recommendations must be strictly followed: 1. Danger of corrosion and dirt accumulation! Ammonia as a refrigerant is extremely soluble, i.e., it attracts moisture. Moisture and dirt must be prevented from entering the unit. 2. Protect the unit from dust, dirt, and moisture, as damage and other harmful influences may occur. 3. Remove the unit from operation in accordance with the removal instructions. • When shutting down, consider the maximum operating pressure! If necessary, take precautions so that it cannot be exceeded. • Protect the fan motor drives and, where applicable, the rods of the electric defrost heater against restarting. • Protect the unit against harmful influences at the installation or storage site in order to keep all components in good condition for proper use and to preserve the usability of the unit. For this purpose, special storage conditions and preventive measures for corrosion protection must be observed. • Purge the unit: completely release the working fluid;

9.3 Startup after a long shutdown

The unit must be restarted in accordance with the specific system settings and the startup procedures in this operating manual.

• Test the readiness of the systems for operation. Perform the pressure test and visual inspection.

WARNING
The pressure test should only be performed with appropriate means and with the appropriate test pressures recommended in the equipment's technical description. Start up the unit according to the instructions in this document. Before restarting, conduct a thorough inspection of the system to ensure that all parts are in operational and safe condition. Follow a detailed restart procedure that gradually brings the unit back to full operation, monitoring for any signs of problems.

9.4 Changing the working fluid

WARNING
The working fluid of the unit must NOT be changed to another working fluid without the prior written consent of Güntner do Brasil.

- Ensure that the unit manufacturer agrees to the change.
- Verify that the correct working fluid has been recharged.
- Check that all materials used in the unit are compatible with the new working fluid.
- Check that the PMTA has not been exceeded.
- Check that the new working fluid can be used without the need for a new test certificate for the unit.
- Ensure compliance with the classification.
- Ensure that the safety device for the unit must be replaced or restored.
- All information related to the new working fluid must be changed accordingly.
- The complete documentation, including these operating instructions and the system operating manual, must be changed accordingly.
- Perform acceptance testing.

10 GMM CONTROLLER (IF APPLICABLE)

10.1 GMMnext startup

When you turn on the GMMnext for the first time, the equipment will open a settings window in which you will be asked for various information necessary to ensure the correct operation of the equipment. To perform the configuration, follow the step-by-step instructions below.

To make selections, use the round button on the GMMnext. Turn the round button to change the fields and press it to confirm. The button with the arrow returns to the previous menu and the button with a house design returns to the initial menu.

1. Select the desired language and then press the rotary button to confirm.

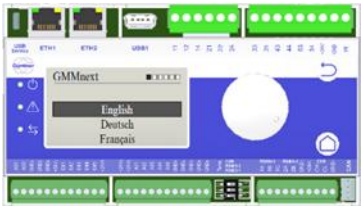

2. After selecting the language, press the forward key (>) to continue with the initialization.

3. Set the date (year – month – day) by clicking on 'Modify' and continue:

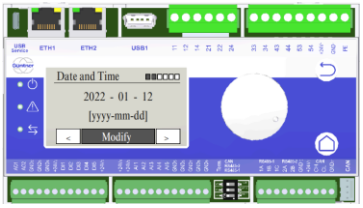

4. Set the time (hour – min – sec) by clicking on 'Modify' and continue:

*AM = before noon

*PM = after noon;

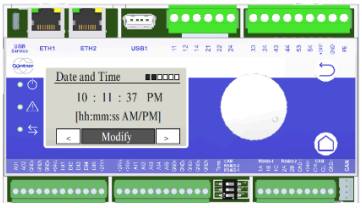

5. Select "Modbus (EC)", then press ">" to continue with commissioning.

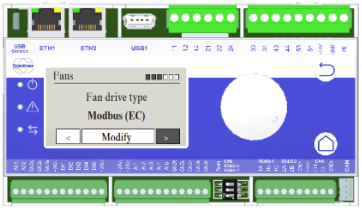

6. Select the number of fans present in the equipment:

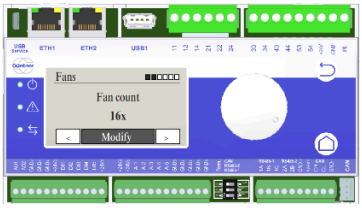

7. In the case of ECOSS, regardless of the configuration, keep the number of a queue (1x) for the fans and proceed.

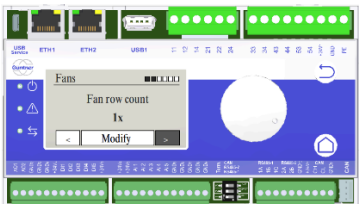

8. To configure the fans, change the "With fan ID" option to select the "Without fan ID" field and continue.

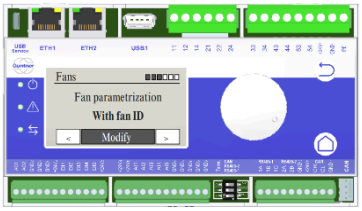

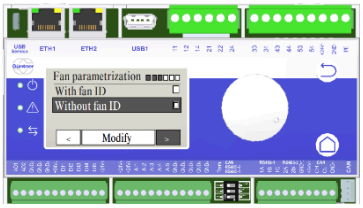

9. In the speed configuration, change to the nominal value of the motors and proceed.

Note: This value can be found on the fan plate or in the equipment datasheet.

10. In the coil count, confirm the default setting (1x) and proceed.

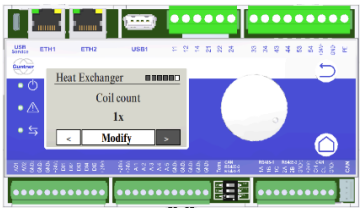

11. Set the controller's Operating Mode to "Auto internal."

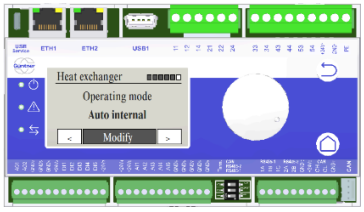

12. In the pressure sensor scale, confirm the default setting (25.0 bar):

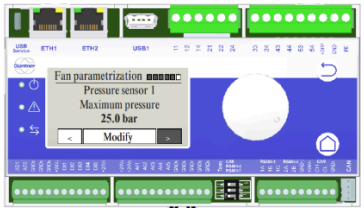

13. At this point, the initial settings are complete. Select "Finish" to proceed to the main menu.

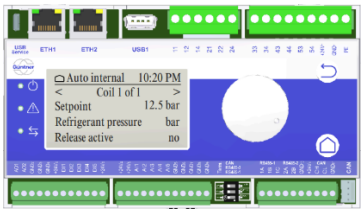

14. To prevent the equipment from shutting down completely, it is necessary to configure a minimum speed for the fans.

    In the main menu, click the round button to access the settings and then click the following options:

    a. "Service"

    b. 'Regulation'

    c. 'Control value base'

    Change the value to 10% and confirm. Press the lower right button to return to the initial window.

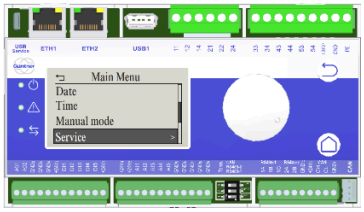

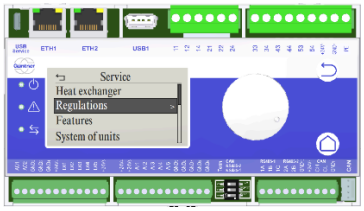

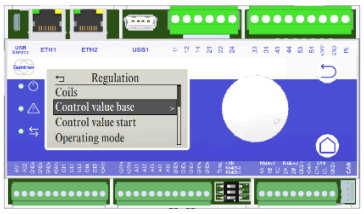

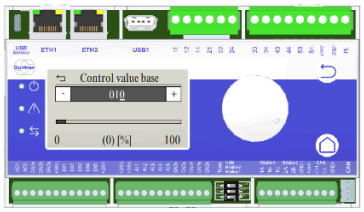

15. If the equipment has more than one temperature or pressure sensor, it is necessary to configure the corresponding analog input. To do this, follow these options:

    a. “Service”

    b. “I/O Configuration”

    c. “Analog inputs”

    Select the AIx input as shown in the electrical diagram and confirm.

    In "Profile," select the type of input used (usually Current 4-20mA).

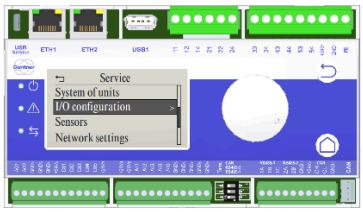

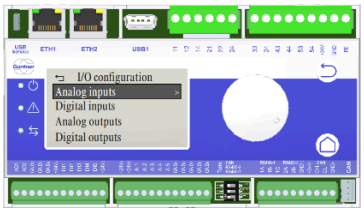

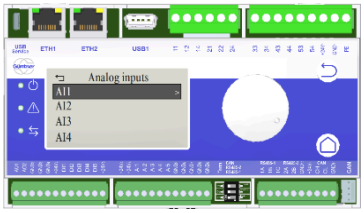

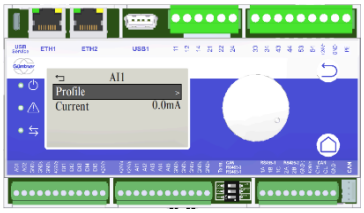

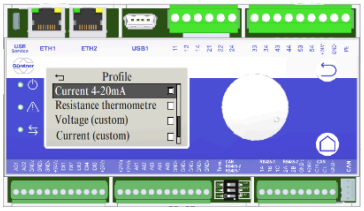

16. If the equipment has one or more temperature sensors, it is necessary to verify that they are configured with the correct model.

    The model can be accessed at:

    a. “Service”

    b. "Sensors"

    c. “Temperature Sensors”

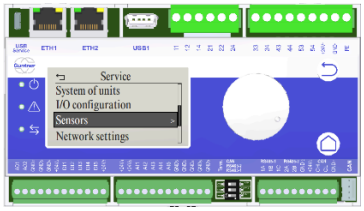

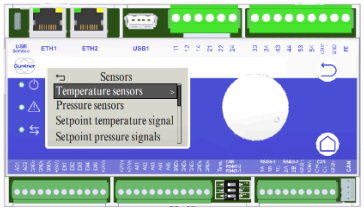

© Güntner GmbH & Co.

10.2 GMM parameterization via USB

To perform parameterization via USB device, follow these steps:

1. Select the language

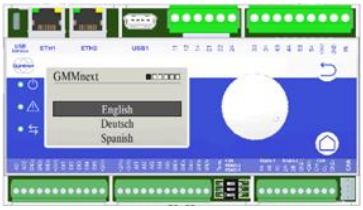

2. Start the configuration process (>)

3. Select the “Load configuration” option

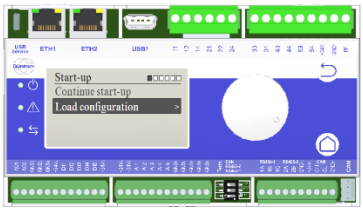

4. Insert the USB device with the configuration previously loaded by the Smart Solutions department. The USB port is located at the top of the controller.

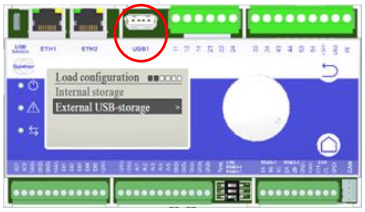

5. Once the USB is inserted into the GMM, select the "External USB storage" option

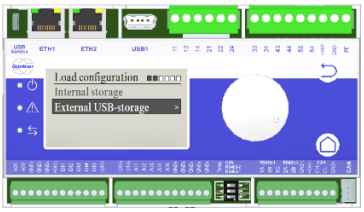

6. Select the file with the unit configuration (there should only be one file inside the USB). Wait a few seconds while the configuration is applied to the GMM Next controller.

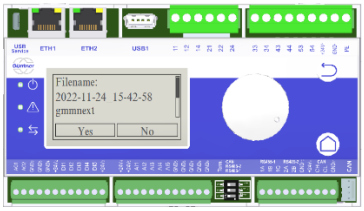

7. Restart the configuration by choosing the language and continuing.

8. Change the date and time.

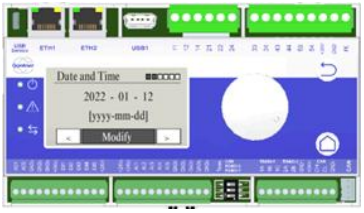

9. Select "Modbus (EC)", then proceed (>) to continue with commissioning.

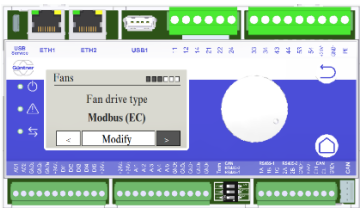

10. Indicate the number of fans and keep the value at 1 row.

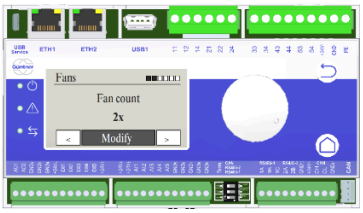

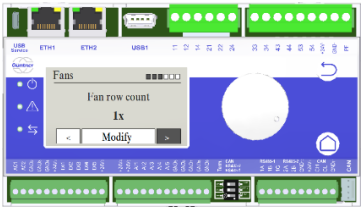

11. To configure the fans, enter the FAN ID by selecting the "With fan ID" option. Or, if the fan to be used does not have an ID, select the "Without fan ID" option.

    The ID can be found in the motor symbol data shown in the wiring diagram. After entering the identification number, press the "enter" key.

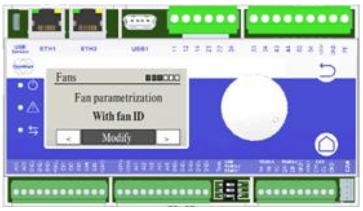

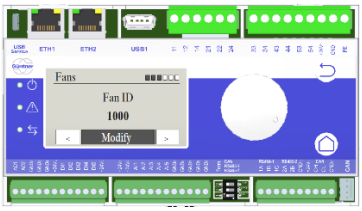

12. You must enter the fan speed. Press "Modify" to enter the speed. You can find the RPMs in the motor symbol data shown in the wiring diagram.

Note: Press the Navigator button for three seconds to change the selected digit and quickly obtain the value.

13. If the fans are connected correctly, the following screen will be displayed. If not, carefully check the connections between the fans and the GMODs.

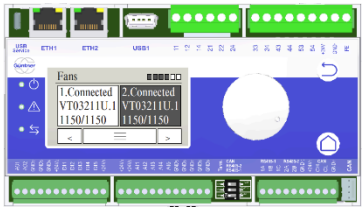

14. "GMMnext is ready!" will be displayed on the screen, and the process will be complete. Just like the sensors, the number of coils and type of unit were programmed via USB.

11 RESOURCE

The Resource system reads sensors installed in the equipment every 5 minutes and sends the data to the Cloud via Mobile Internet (2G, 3G, or 4G Data Chip). In the default project, the system does not have access to the customer's local network/intranet. If the Internet signal drops, the system stores the data for 1 day and sends the stored data as soon as the signal is restored.

This data is stored in the cloud for analysis and triggering of alarms regarding the operation of the equipment. The goal is to further optimize water and energy consumption. The Güntner ECOSS Resource application allows users to make decisions based on operational data. Possible applications include predictive maintenance and corrective configuration or adjustments made locally.

The app is available for Android in the Play Store as Ecoss Resource or via the QR code below. For access via iOS, please contact Güntner technical support.

*APP SOMENTE PARA ANDROID

ECOSS Resource monitors the following variables in the equipment :

- Energy consumption;
- Water consumption;
- Purging time;
- Fan modulation;
- Water conductivity;
- Dry bulb temperature;
- Relative humidity;
- Condensation pressure;
- Motors;
- Pumps;
- Pressure Set Point.

In addition to being monitored by the owner, ECOSS Resource is also monitored by Güntner do Brasil's after-sales team. This allows us to quickly and efficiently assist with occasional equipment malfunctions, ensuring that your ECOSS G3 operates at peak performance.

Monitoring is carried out with the user's consent and in a secure manner. Authorization to share data can be revoked at any time. If necessary, please contact the technical team.

12 MAINTENANCE

12.1 Safety in maintenance

⚠ WARNING

Danger of injury and property damage due to NH_3(Ammonia) refrigerant leak!

The release of working fluid can cause explosion and fire. In addition, oil and NH_3residues transported unintentionally can cause burns.

⚠ CAUTION

Ensure that no working fluid and/or oil is transported unintentionally;

Keep the risk area free from direct and indirect ignition sources;

Before releasing for maintenance, obtain the necessary approvals for work that may involve ignition sources;

When performing work involving ignition sources, keep appropriate firefighting equipment on hand that complies with current regulations;

Some working fluids present are corrosive. Contact with skin, mucous membranes, and eyes may cause burns;

Wear eye protection!

Wear hand protection!

Warning against toxic and hazardous substances! Ammonia (NH3) is toxic;

Wear respiratory protection.

Check that the unit in question is pressure-free before starting maintenance work;

Turn off the electrical system and protect it against unintentional reconnection;

With the fans and hinged side panels, you will have easy access to the equipment coils, fan motors, and connections;

When working on the intake and exhaust fans, objects may be left in the fans and thus cause malfunctions and damage to components;

After completing the work, do not allow any objects to enter the fan intake and outlet sources.

12.1.1 Before starting maintenance

To perform maintenance work that involves risks of contact with refrigerant or any type of hot work, it is necessary to completely collect or remove the fluid from the unit. Therefore, it is best to remove the refrigerant, vacuum for 24 hours, and only then begin maintenance.

WARNING

There is a risk of injury and property damage from the release or leakage of working fluid.

12.1.2 After completing maintenance

Perform the following safety actions at the end of maintenance:

- Check that the switching and activation devices, measuring and display devices, and safety devices are functioning correctly.
- Check that the working fluid connections are securely connected;
- Check that the fans and hinged side covers have been secured in their original positions and protected against unintentional or unauthorized opening;
- Check the identification of the pipes and make sure it is visible and legible;
- Check that the electrical connections (fans and pumps) are correctly connected;
- Perform a visual acceptance test;
- Perform a pressure test and a leak test;
- Refill the fluid;
- Start the equipment and balance the system.

12.2 Mandatory maintenance schedule

12.2.1 Checks and adjustments

Operation	Startup	7 days	15 days	30 days	90 days	180 days
Reading the manual for transport, assembly, operation, and maintenance	X					X
Verification of water distribution in the upper module	X		X			
Checking the direction of rotation of the water pump	X					X
Checking the water level in the tray and adjusting the equipment's water float	X	X				
Checking the installation of additional accessories	X					
Adjustment of GMM operating parameters (if applicable)	X					

12.2.2 Maintenance and cleaning

Operation	Startup	7 days	15 days	30 days	90 days	180 days
Cleaning and sanitizing the water distribution system (sprinkler nozzles)				X		
Cleaning and sanitizing the tray	X		X			
Cleaning and sanitizing the side, bottom, and top closures (fairings)						X
Cleaning and sanitizing of drip eliminators				X		
Cleaning of equipment coils						X
Lubrication of water pump motor(s) (according to the manufacturer's manual)			X			
Cleaning the tray level sensor			X			
Cleaning the tray filter			X			
Cleaning the electrical panel cooler filters			X			
Cleaning the propellers according to the fan manufacturer's manual				X		

12.2.3 Instructions

Operation	Startup	7 days	15 days	30 days	90 days	180 days
Fan inspection: Fouling, direction of rotation, condition of grilles	X					X
Checking the level of incrustation in the water collection tray	X		X			
Check the closures and seals of electrical panels and fans	X					X
Checking the tightness of the fan electrical box(es) and screws	X	X				

12.2.4 Control and monitoring

Operation	Startup	7 days	15 days	30 days	90 days	180 days
Monitoring by GMM (if applicable)			X			
Control of chemical treatment in accordance with the minimum analytical parameters required for water quality	X			X		
Water purge control	X		X			
Scale level control for heat exchange coils				X		
Control of the current of the electric motor(s) of the water recirculation pump(s)	X					
Fan current control	X					
Monitoring of the water temperature in the tray	X		X			
Monitoring of working fluid inlet and outlet temperature	X		X			
Control and recording of the recommended maintenance and monitoring program	X					
Monitoring of the condition of the sealing profiles of the side covers				X		

12.3 Maintenance procedures

12.3.1 Filter and tray

- The water tray should be inspected regularly;
- Clean the tray every 15 days (this interval may be shorter or longer depending on the conditions of the water used in the equipment's operation).
- The water tray should be drained, cleaned, and rinsed with clean water to remove salts and sediments that normally accumulate in the container and below the surface of the heat exchanger;
- During tray rinsing, the filter must be kept in the correct position to prevent sediment from entering and affecting parts of the hydraulic system;
- The suction filter is responsible for preventing objects from being sucked into the pump;
- Only after rinsing and cleaning the water container can the filters be removed and cleaned;
- After cleaning, the filter must be put back in place before filling the tray for start-up.

WARNING
When using a cleaning agent, the operator must ensure that the cleaning agent is environmentally friendly. Only use cleaning agents authorized by the Güntner do Brasil technical team.

12.3.2 Basin water level and water valves

- Check the basin water level regularly;
- Check that the water supply valve is working properly;
- Check for water leaks in the water circuit valves and replace if necessary;
- Check that the float level switch can move freely and that the float level switch closes the water valves when necessary;
- Ensure that the drain valve and drain pipe are clear and suitable for draining water;
- The water level should be about 35 mm below the drain valve (about two fingers);
- The minimum pressure for float operation is 0.6 bar, while its working range should be between 1 and 5 bar. Values outside this operating range cause damage to the valve that is not covered by the equipment warranty.
- Correct adjustment of the water float is essential. Operating the equipment with water below the level can reduce the pump's service life and void the warranty for this component. On the other hand,

equipment with the float adjusted to a water level above the ideal level may cause water waste.

12.3.3 Drift eliminators

Drift eliminators are responsible for condensing water back into the tray, preventing waste and the dispersion of droplets around the equipment. To maintain the droplet eliminators, follow the procedure below:

- With the fans and pumps running, observe—with the fan covers closed and without taking any risks—the areas covered by the droplet eliminators to try to identify: obstructions, damage, dirt, incorrect fitting, etc.
- If maintenance is required, all equipment must be de-energized;
- Droplet eliminators must be carefully removed from the equipment;
- If any eliminators are damaged or inefficient, they must be replaced;
- If the eliminators are dirty or clogged, they must be cleaned as described in "item 12.4.3";
- At the end of maintenance, carefully install the eliminators, ensuring there are no gaps between the parts and closures;
- Before completing maintenance, ensure that the fan covers are completely closed;

12.3.4 Water distribution system – spray nozzles

The water spray nozzles must be assembled and monitored in accordance with Güntner's recommendations. They are responsible for distributing water in the equipment and contribute directly to adequate heat exchange. In addition, the service life of the evaporative condenser depends on how the periodic maintenance of the spray nozzles is performed. The user must be able to evaluate the spray constantly. A good practice is to provide the maintenance team with a set of spare water spray nozzles for quick replacements.

The water distribution system of GTECH equipment has a manifold that branches into 4 ways with equal numbers of spray nozzles. The total number of nozzles will depend on the equipment model. When the nozzles are not cleaned periodically, water distribution in the block is expected to become less and less efficient, inevitably leading to coil fouling. The consequence of this is a high loss of capacity, along with an overload in the system, which will start to work with higher suction and discharge pressures, generating greater energy consumption and tending to drag the oil out of the compressor. In addition, scale buildup on the coil is the main cause of pitting corrosion. This corrosion is caused by the deposit of certain oxidative particles on metals, which over time form reddish micro-holes.

To maintain the spray nozzles, follow the procedure below:

- Turn off the fans;
- Remove the droplet eliminators;
- With the fans turned off and the pumps running, visually check the water spray areas to identify obstructions, damage, cleanliness, incorrect fitting, scaling, etc.;
- When identifying nozzles that may require maintenance or overhaul, turn off the pump;
- Remove the nozzles by holding firmly at the top and pulling sideways at the bottom to disengage;
- All damaged or missing nozzles must be replaced;
- Dirty or clogged nozzles should be cleaned as described in "item 12.4.4";
- Install sprinkler nozzles and make sure they are correctly fitted;
- Turn on the pumps and observe the water distribution again to verify that the replacements have been effective;
- Ensure that there are no leaks in the seals; these should be replaced if necessary;

- Reinstall the droplet eliminators;
- Ensure that the fan windows are closed and the screws are tightened.

Figure 30 - Four internal branches and distribution of sprinkler nozzles.

12.4 Pumps

For pump maintenance, follow the procedures indicated in the manufacturer's manual. In addition, to ensure long pump life, ideal operating conditions must be maintained through preventive maintenance of the entire system.

12.4.1 Troubleshooting

Centrifugal pumps may experience operational problems due to specific operating conditions or lack of proper maintenance. Below are some of the most common problems and their potential causes.

Symptom	Cause	Solution
The pump does not pump liquid or pumps very little	Incorrect electrical connection of the pump	Correct the electrical connection according to the pump's technical data sheet.
	Incorrect direction of rotation	Change the electrical connection
	Air in the suction pipe	Purging the pipe
	Clogged suction or rotor	Clean the pipe
	Pump sucking air (insufficient seal)	Check the tightness of the flange bolts, the condition of the gaskets, and the mechanical seal.
	Insufficient liquid available at the pump suction, allowing air to be sucked in.	Increase the liquid level in the tray to the indicated level by adjusting the water inlet float. Check that the suction pipe valve is open.
The pump emits noise and/or high vibrations	Low inlet pressure (pump cavitating)	Check the water level in the equipment tray and the opening of the suction pipe valve.
	The pump is sucking in air due to low liquid level	Adjust the liquid level and readjust the tray float
	Air in the suction pipe of the pump	Purging the air from the system
	Unbalanced rotor	Check the rotor
	Wear of internal parts	Replace damaged parts
	Damaged bearings	Replace bearings
	Damaged cooling fan	Replace fan
	Presence of debris inside the pump	Clean the pump
	Operation with frequency converter	For operation with frequency inverter, contact Güntner.

Liquid leaks	Incorrect tightening of the pump flange screws	Check the tightness of the screws on the pump connection flanges
	Damaged or incorrectly positioned connection joints incorrectly positioned	Replace or reposition the gaskets on the pump flanges
	Damaged mechanical seal	Replace the mechanical seal
	Damaged shaft surface	Replace the shaft
Pump or motor temperature too high	Air in the suction pipe or pump	Purging the air from the pipe and pump
	Inlet pressure below required level	Adjust the liquid level, regulate the float valve on the tray and the water inlet pressure.
	Worn bearings	Replace the bearings
	Inadequate electrical connection	Adjust the electrical connection to the technical specifications

12.5 WEG AC (IEC) fans

If WEG AC (IEC) fans are used, it is mandatory to follow the maintenance plan established by the manufacturer. For motors that have been stored and/or installed for more than two years but have not been put into operation, it is recommended to replace the bearings or remove, wash, inspect, and relubricate them before putting them into operation.

For more details on the operations described below, refer to the topics “Operation -> Motor Start-up” and “Maintenance” in the manufacturer's catalog. Any intervention that damages the motor paint must be repaired to prevent corrosion spots from appearing. For start-up, check the following points:

Operation	Startup	7 days	15 days	30 days	90 days	180 days
Motor rotation direction	X					
Motor drive system	X				X	
Correct assembly of the unit	X					
Integrity of the connection box	X				X	
Motor connections	X				X	
Accessory operation	X				X	
Whether the nameplate complies with the application	X					
Motor insulation resistances	X				X	
Condition of the capacitors	X				X	
Complete clearing of air vents	X			X		
Protection of rotating parts	X			X		
Air inlets and outlets	X			X		
Tightening of connection, support, and fastening screws	X			X		
Condition of cable passages in the connection box, cable gland seals, and seals in the connection boxes; replace if necessary	X					

The preventive maintenance routine for each engine component is:

Component	Monthly	Annual	Every 3 years
Complete motor	Noise and vibration inspection and clearing of ventilation fins.	Retighten screws and connections.	Disassemble motor, check parts and components.
Bearings	NA	Noise control.	Inspect bearings and (axle) track, clean, repair, and/or replace when necessary.
Connection boxes	NA	Clean interior, retighten screws, check connection terminals.	NA
Ventilation	Clear air inlet from deflector cover.	Check condition of blades.	Check condition of blades.
Drain	Check and clean the drain	NA	NA
Grounding	NA	Check connection and retighten screws.	Check connection and retighten screws.

12.6 EC fans

For maintenance of EC fans, follow the procedures indicated in the manufacturer's manual. In addition to the manufacturer's recommendations, some operations are basic and must be performed before and after startup, as shown in the routine table:

Operation	Startup	7 days	15 days	30 days	90 days	180 days
Check that the fan's electrical installation has been carried out professionally	X					X
Check the operation and presence of safety devices.	X					X
Check that the data on the nameplate complies with the application and the network supply	X					X
Check that the seal at the electrical cable entry is intact.	X					X
Check that the direction of rotation of the propellers is correct	X					X
Check that the fan air box is clean and free of foreign objects	X					
Check that rotation is quiet and without excessive vibration				X		
Check the cleanliness of the motor and propellers, clean if necessary				X		

12.7 Cleaning procedures

WARNING

Before starting any work on the product, turn off the power supply. Make sure that the electrical power cannot be turned on. Before starting any work on the product, close all connections that carry fluid. Make sure that there is no fluid in the equipment that could inadvertently return.

- The fans, side covers, and access doors are hinged and removable for easy cleaning.
- The operator must ensure that the cleaning agent is environmentally friendly. Substances that are harmful to the environment are not recommended;
- Only cleaning agents authorized by Güntner's technical team should be used.
- Cleaning agents must be compatible with the equipment's construction materials.

12.7.1 Cleaning the coil and fairing

WARNING

To preserve the quality and durability of the Galvanized Evaporative Condenser, it is important to keep it free from environmental contamination, welding spatter, grinding particles, and contaminating particles. When using a high-pressure water jet, the maximum pressure is 10 bar for the fairing at a distance of 200 mm. For some components such as fans, floats, and others, the use of a pressure washer is not recommended.

The coil, fairing, and tray can be cleaned using:

- Cleaning with compressed air:
  - I. Blast the coil with compressed air at a maximum pressure of 80 bar to remove dirt and contaminants at a minimum distance of 200 mm.
  - II. Blow the casing and tray with compressed air at a maximum pressure of 10 bar to remove dirt and contaminants at a minimum distance of 200 mm.

- Hydraulic cleaning:
  I. CAUTION! Water and cleaning agents conduct electricity. Switch off the fans and water pump for cleaning with water or steam jet.
  II. CAUTION! Water or steam jets can damage fans, electrical connections, or other components. Make sure that electrical connections and motors, as well as components and stored products, are not exposed to water or steam jets. Protect them if necessary.
  III. When using high-pressure water jets, steam jets, or neutral cleaning agents, the maximum pressure of 50 bar for the coil and 10 bar for the housing and tray at a distance of 200 mm must be observed.
  IV. Ensure that the cleaning agent is environmentally friendly. Substances that are harmful to the environment are not recommended.
  V. Ensure that the chemical cleaning agents are not aggressive to the materials of the unit. Rinse the unit after treatment.
- Mechanical cleaning with brushes:
  I. Remove dust or dry dirt with a brush.
  II. Use soft brushes (never steel brushes or similar)!

If signs of corrosion or surface damage are identified, the affected area shall be cleaned and subsequently treated with a protective coating. The use of ZRC primer (Cold Galvanizing Compound), or an equivalent high-zinc-content product, is recommended. When necessary, the external surfaces of the equipment may also be touched up with a compatible epoxy paint suitable for the application.

12.7.2 Cleaning the drift eliminators

The main function of drift eliminators is to prevent water from being carried away during equipment operation. Their operation can trap dirt, so they require routine cleaning. The cleaning procedure follows these steps:

1. Shut down the equipment completely;
2. Open the fan windows;
3. Remove the droplet eliminators;
4. Wash the eliminators with a high-pressure jet outside the equipment;
5. Reinstall the droplet eliminators (note their installation direction and make sure that the rough surface is facing down).

12.7.3 Cleaning the spray nozzles

The spray nozzles should be cleaned whenever dirt or irregular spraying is observed. The nozzles must be free of any obstruction, as this interferes with the equipment's service life. The cleaning procedure follows these steps:

1. Remove the spray nozzles from the equipment;
2. Leave the nozzles submerged for at least 2 hours in a container with water and mild detergent;
3. Use a brush to clean the inside of the nozzle;
4. Reinstall the nozzles in the condenser water distribution lines;

12.7.4 Cleaning the level float valve

Cleaning the level valve is necessary to prevent it from malfunctioning due to obstructions.

1. Remove the nut and screw securing the float;
2. Remove the float from the valve;
3. Check for dirt that may prevent the valve from closing;
4. Clean with a pressure washer or compressed air in the opposite direction to the water flow;
5. Reattach the float to the valve;
6. Blow into the valve inlet and move the float to check if it is working.

12.7.5 Cleaning the fans

Fans must be cleaned to prevent failure due to corrosion or imbalance. Cleaning must be performed according to the instructions in the fan manufacturer's manual, or for EC fans according to the procedure below:

1. Wash the fan with plenty of water.
2. Scrub the fan with a sponge and mild soap.
3. Rinse the fan with plenty of water.

To avoid imbalance, do not use high water pressure or chemicals that are incompatible with the fan material.

12.7.6 Cleaning the water pump

Under normal operating conditions, the water pump does not require cleaning. However, periodic checks of the rotor are recommended, for which the motor must be de-energized.

If cleaning is necessary, it should only be done with the equipment de-energized, and the pump can only be turned back on after closing the clamp, certifying that the butterfly valves on the suction and discharge are completely open, and that the correct water flow will be guaranteed.

13 PURGE AND CHEMICAL TREATMENT OF WATER

WARNING
The purge must not return to the equipment. The installation of a purge connection returning to the tray, or to any other component of the evaporative condenser, is expressly prohibited and will void the warranty.

13.1 Purging

Periodic or continuous purging is necessary to prevent excessive concentration of salts that increase water hardness, or to drain oils and other impurities that may be in the recirculating water.

WARNING
Excessive increases in water hardness can accelerate the process of scale formation on the heat exchange coil and, consequently, loss of performance over time. In the worst cases, when this high concentration of salts has a chlorinated base, pitting corrosion may occur on the galvanized steel coil.

Thus, the total replacement water flow is given by the evaporation rate plus the water carryover rate due to air saturation plus the purge rate for water deconcentration.

$$Make\text{-}up\ rate = Evaporation\ rate + Drift\ rate + Blowdown\ rate$$

Evaporation rates are related to operating data and are influenced by total air flow, total recirculation flow, wet bulb temperature, capacity, and installation altitude, as well as salt concentration and analytical parameters of the water, which can cause them to vary. The exact evaporation rate at the design point can be found in the product data sheet. If you have any questions or need further information, please consult the Güntner do Brasil technical team.

The table below shows the maximum analytical parameters for safe operation:

Parameter	Recommended limit
pH	6,5 a 8,0
Total alkalinity (ppm CaCO3)	200
Calcium Hardness (ppm CaCO3)	200
Chlorides (ppm as Cl)	250
Soluble Silica (ppm as Sio2)	410
Sulfates (ppm as SO4)	150
Dissolved solids (ppm)	250
Conductivity (uS/cm)	1500

The blowdown rate is determined based on the Cycles of Concentration (COC) concept. A defined COC indicates how many times the concentration of dissolved substances in the recirculating water may increase while keeping the equipment within the recommended maximum water quality parameters. If you have any questions or require additional information, please contact the Güntner do Brasil technical team for assistance in determining the appropriate blowdown rate.

13.2 Galvanized Surface Passivation and Water Quality

Degradation of the zinc coating may occur on galvanized surfaces when operating conditions or water quality do not favor the stability of the protective layer.

White corrosion is characterized by the formation of whitish deposits on the zinc surface, indicating accelerated consumption of the coating. For galvanized surfaces to achieve maximum corrosion resistance, surface passivation must occur. This process consists of the gradual formation of a stable protective film, composed mainly of zinc oxides and carbonates, which reduces the corrosion rate and extends the service life of the coating.

During the initial operating period of galvanized equipment, particularly in evaporative systems, proper control of water chemistry is essential to promote the formation of this passive layer. Components in direct contact with the recirculating water are particularly sensitive during this period and require careful monitoring of the water chemistry parameters until the protective film is fully established.

After passivation, the galvanized surface develops a characteristic matte gray appearance and increased resistance to corrosion, making it less sensitive to variations in water chemistry.

The natural passivation period typically occurs within 6 to 12 weeks after initial operation. During this period, operation under the following water quality conditions should be avoided:

1. pH above 8.3;
2. Calcium hardness (as $CaCO_3$) below 50 ppm;
3. Chloride or sulfate concentration above 250 ppm;
4. Total alkalinity above 300 ppm.

If the passive layer is degraded or removed, the zinc returns to a more electrochemically active condition and becomes more susceptible to corrosive attack. As a result, the corrosion rate increases, accelerating zinc coating depletion and reducing the service life of the galvanized steel.

13.3 Automatic purge

In order to ensure that the water parameters of the Evaporative Condenser are kept with t within the levels recommended by Güntner, the GTECH can be equipped with an automatic purge system accessory. This method is based on the concept of water conductivity, due to the concentration of recirculating salts during machine operation. During equipment operation, a conductivity sensor constantly reads the conductivity of the recirculating water in µS/cm² and temperature, and automatically deconcentrates the salts in the recirculating water according to the established parameters.

The conductivity parameter is constantly analyzed and, through a controller and a motorized valve, the purge is initiated.

WARNING
The purge valve must be protected from water jets and possible damage. When cleaning the equipment, do not direct water jets onto the purge valve.

No field intervention is required to put the system into operation. This mechanism does not replace water treatment, which must be guided by a specialized company.

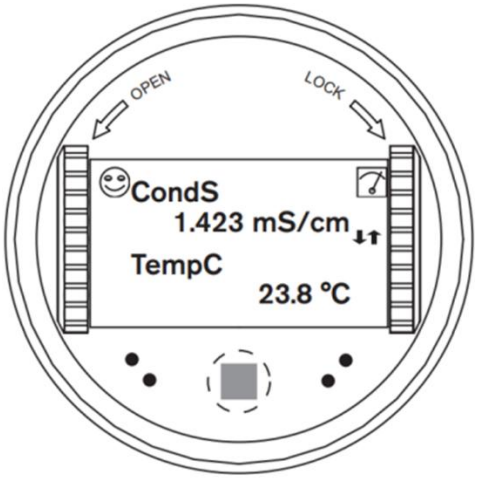

Figure 31 - Display showing the conductivity and temperature of the recirculating water.

WARNING
Changing the factory-set sensor parameters will void the product warranty. In addition, it is prohibited to operate the equipment with the automatic purge outlet closed, and the installation of additional valves is prohibited. Failure to comply with this guideline will also void the product warranty.

13.3.1 Automatic purge activation

After the equipment is started up, with the condenser enabled and the emergency release activated, the system begins checking the conductivity parameters through the sensor. When the water reaches parameters above those specified at the factory in the µS/cm² unit (Setpoint [SP]), the purge valve is activated. The valve then remains activated as long as the conductivity is above the factory-specified value in µS/cm² (Setpoint – Hysteresis [SP-Hyst]). If the value remains above and the time elapsed since the start of the purge is equal to the factory-specified value in the s unit, the purge process is interrupted by the factory-specified value in the s unit, and the cycle restarts. The cycle will repeat indefinitely while the condenser is enabled.

13.4 Chemical water treatment

Some applications use industrial water from artesian wells or wastewater. These often have analytical parameters outside the recommended limits for safe equipment operation, and therefore chemical treatment is necessary for water quality control and operational safety.

During equipment operation, in addition to the impurities present in the replacement water, all impurities present in the air are transported and can accumulate or proliferate in the equipment basin and recirculating water. Thus, to inhibit the growth of microorganisms such as algae, fungi, slime, and bacteria such as Legionella, treatment with biocides can be applied for biological control along with continuous monitoring of water quality.

WARNING
The chemicals used in the treatment MUST be compatible with the materials used in the manufacture of the equipment. In other words, they must be compatible with GALVANIZED STEEL

(construction material of the closures, structure, and coil), ALUMINUM (fans), AND CAST IRON (water pump), and therefore must be FREE of any CHLORINE, BROMINE, and IODINE-based compounds.

If you have any questions or require further information, please consult the Güntner do Brazil technical team.

WARRANTY

Dear Customer,

Güntner do Brazil offers a warranty against manufacturing defects for its equipment for a period of 24 months from the date of issue of the invoice. The customer must immediately notify Güntner do Brazil in writing of any defects that have occurred and make the product available for analysis for the period necessary to identify the cause of the deviation, verify warranty coverage, and make the necessary repairs. Damage possibly caused as a result of transportation must be reported on the back of the bill of lading and recorded with photos at the time of receipt of the equipment. To be eligible for the warranty, the customer must comply with the specifications in Güntner do Brazil's technical documents, particularly those set out in the Equipment Transport, Assembly, Operation, and Maintenance Manual, as well as the installation, operation, maintenance, and storage standards and regulations in force in each state or country.

The warranty does not cover defects resulting from improper or inappropriate use, operation, handling, and installation of the equipment; failure to comply with the specifications set forth in the operating manual; tampering with seals; alterations, changes to the product serial number or equipment identification plate; exposure to inappropriate cleaning products; electrical overload; the existence of unqualified devices connected to the equipment; lack of preventive maintenance; as well as defects resulting from external factors. Damage to the equipment during transport to the installation site, when transportation is not the responsibility of Güntner do Brazil, is not covered by the warranty.

The warranty does not apply if the customer, on their own initiative, opens, repairs, or modifies the equipment without the prior written consent of Güntner do Brazil. The warranty does not cover defects or problems resulting from negligence or other causes that cannot be attributed to the manufacturer, but not limited to: incorrect or incomplete specifications or data provided by the customer, transportation, storage, handling, installation, operation, and maintenance not in accordance with the instructions provided, accidents, civil works deficiencies, use in applications or environmental conditions that were not previously known to Güntner do Brazil.

The warranty does not include disassembly services at the customer's premises, removal, loading, or product transportation costs when requested by the customer. Warranty services will be provided by Güntner Technical Assistance, in the field or at its own factory. These warranty services will not extend the warranty periods for equipment or replaced or repaired parts and components. If no manufacturing and/or component defect is found, a technical report will be generated and, if an advance warranty claim has been sent, a proposal will be sent with all the costs of the occurrence for commercial settlement. When the warranty is found to be valid, the items will be sent at no cost to the customer. Güntner reserves the right to request the return of the non-compliant item for analysis and/or to send a technician for on-site analysis with prior scheduling and upon approval by the customer and/or end customer. When the return of non-compliant material is requested, the costs of the operation are borne by the customer. Güntner do Brazil's civil liability is limited to the product supplied and it is not liable for indirect or consequential damages, such as loss of profits, loss of revenue, and the like, which may arise from the contract signed between the parties. Complaints should be sent to the email: assistance@guntner.com. Upon receipt of the report, the documentation will be sent for completion, and the incidents will be addressed upon submission of the respective documents.

© Güntner GmbH & Co.

AFTER-SALES SERVICE CONTACT

Our After-Sales department has a specialized team committed to answering any questions, providing technical assistance, support, and/or resolving problems with a quick and efficient response time. The range of services includes everything from *start-up* to commissioning and emergency repairs on weekends. If necessary, a member of our team will be quickly dispatched to the site to take care of our customers' problems and/or concerns.

If you need assistance, please do not hesitate to contact us.

Technical Assistance, Quality, and Services
Güntner Heat Exchange do Brasil Ltda.
Rua Hermes Fontes, 365, Room 02, Santa Fé Neighborhood
ZIP Code: 95045-180 - Caxias do Sul/RS, Brazil

Phone: + 55 (54) 3220 8130 / 8165
Fax: + 55 (54) 3220 8114 E-mail: quality.br@guntner.com
Website: www.guntner.com.br/contato/